ALL DIMENSIONS ARE IN MILLIMETERS

DEVIATIONS OF UNTOLERANCED DIMENSIONS TO BE AS PER IS:2102–1969 MEDIUM

ROUGH–MACHINED PART

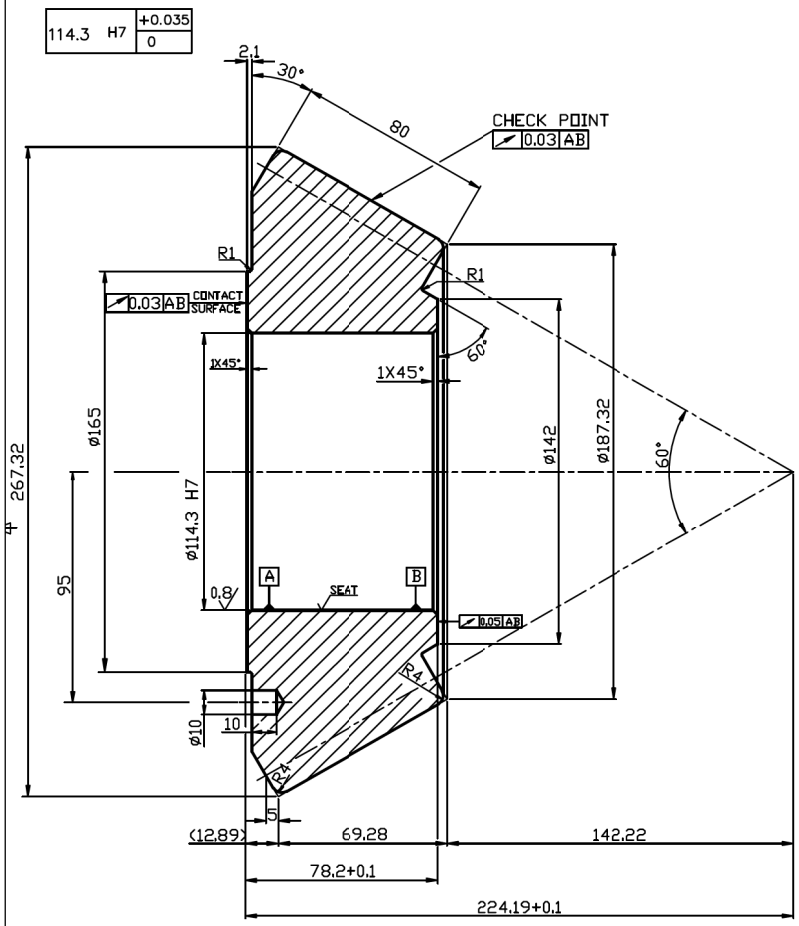

AFTER ROUGH TURNING HEAT TREAT TO σB=70–75Kg/mm^2

FINISH–MACHINED PART

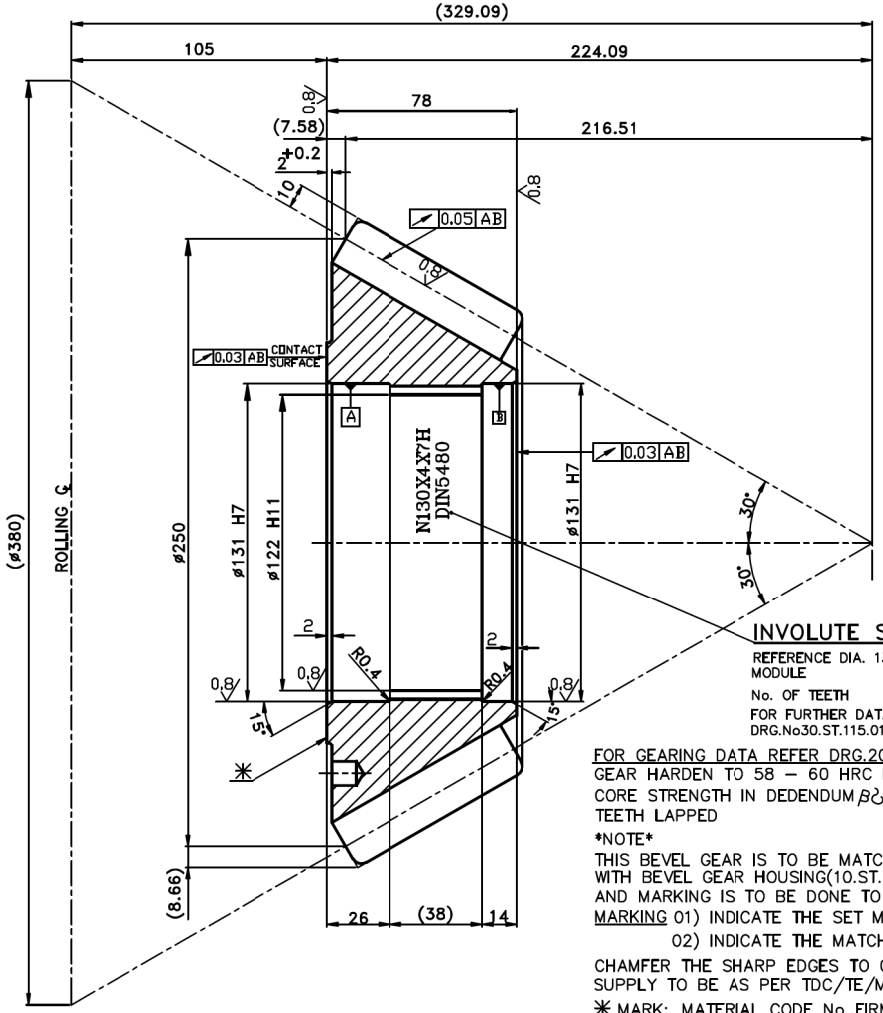

131 H7	+0.040	0
122 H11	+0.250	0

INVOLUTE SPLINE

REFERENCE DIA. 130
MODULE 4
No. OF TEETH 31
FOR FURTHER DATA REFER DRG.No30.ST.115.01.236

FOR GEARING DATA REFER DRG.20.ST.115.01.113
GEAR HARDEN TO 58 – 60 HRC DEPTH 1.0 – 1.2mm
CORE STRENGTH IN DEDENDUM $\sigma 0.2$=85–95Kg/mm^2
TEETH LAPPED

NOTE
THIS BEVEL GEAR IS TO BE MATCHED WITH BEVEL GEAR HOUSING(10.ST.115.01.044) AND MARKING IS TO BE DONE TO INDICATE THE SET
MARKING 01) INDICATE THE SET MATCHING
02) INDICATE THE MATCHING TEEH

CHAMFER THE SHARP EDGES TO 0.3X45
SUPPLY TO BE AS PER TDC/TE/MFG–03

✳ MARK: MATERIAL CODE No.,FIRM'S NAME, P.C.No., & SL.No.

R H SPRIAL 69 11 11 058 2
L H SPRIAL 69 11 11 083 1

MATERIAL :17CrNiMo6 (DIN 1.6587)
CHEMICAL COMPOSITION

C	Si	Mn	P	S	Cr	Mo	Ni
0.14	0.15	0.40	max.0.035	max.0.035	1.50	0.25	1.40
0.19	0.40	0.60			1.60	0.35	1.70

REV	DATE	ALTERED : / REMARKS :
01	01.08.05	*NOTE* ADDED

Bharat Heavy Electricals Ltd
SEAMLESS STEEL TUBE PLANT
TIRUCHIRAPALLI – 620014

	NAME	SIGNATURE	DATE
DRN	S.KUMAR		02.12.05
CHD			
APPD	S.KARUPPASAMY		

DEPT / CODE / GRADE OF MTRL. OR C/M/F / SCALE / WEIGHT (Kg)

REF TO ASSY DWG NO 00.....006
REF TO GA DWG NO 0107048–10.007/008
SHEET NO 9

TITLE: BEVEL GEAR (S R M 380)

CARD CODE: U 01

DRAWING NO : 10..ST.115.01.045

REV 01