DRAWING NO: 1-48-462-43172

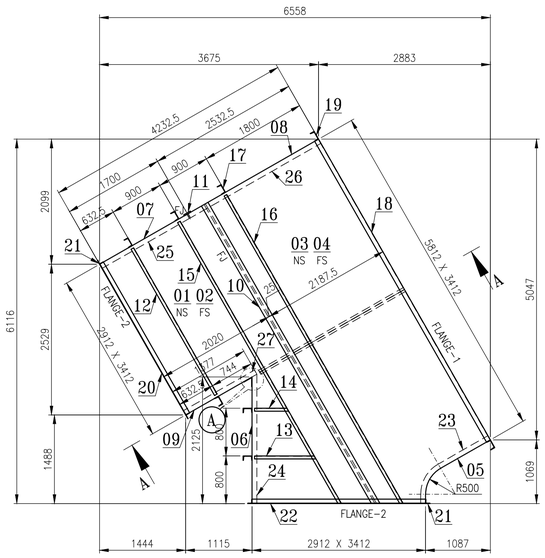

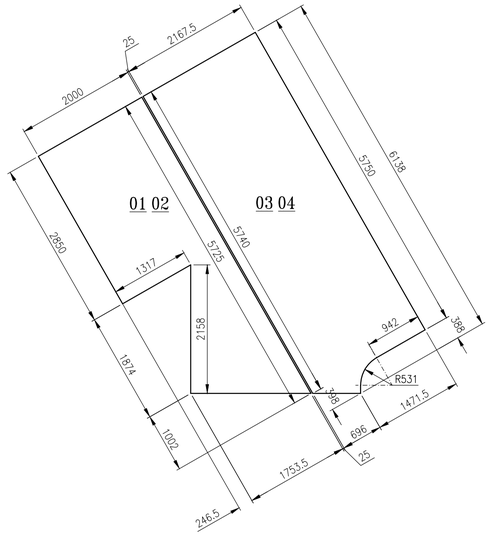

ITEM NOS. 01 TO 04

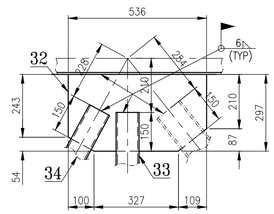

DETAIL – A3

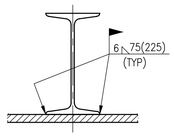

TYP. STIFF BEAM WELDING DETAIL

NOTE:

01. FOR GENERAL NOTES REFER PAGE NO. 41 (REF. 41) OF DUCT CONSTRUCTION MANUAL. REF. 121 FOR CONSTRUCTION DETAIL.

FOR TOLERANCES OF UNTOLERANCED DIMENSIONS DURING MANUFACTURE REFER PLANT STD. NO TP 023 0299

FLANGE DETAILS										
FLANGE NO.	REF	D	X	A	B	W	S	E	F	N
FLANGE-1	REF 109	3412	643	1	914	5812	929	2	1828	24
FLANGE-2	REF 110	3412	643	1	914	2912	786	1	914	18

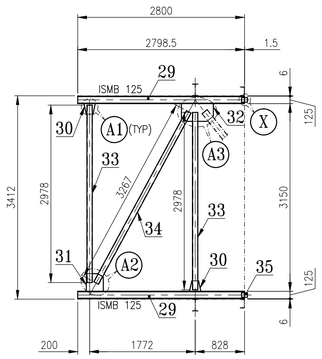

SECTION – AA

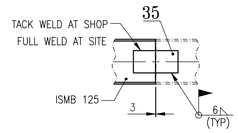

DETAIL – X

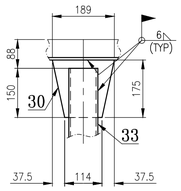

DETAIL – A1

DESPATCH TABLE											
S.NO.	DESCRIPTION	DU. NO.	NO. OFF	ITEM NOS. NO. OFF							
01	Y DUCT WALL	021	1	01	10	12	13	14	15	20	
				1	1	1	1	1	1	1	
02	Y DUCT WALL	022	1	02	10	12	13	14	15	20	
				1	1	1	1	1	1	1	
03	Y DUCT WALL	023	1	03	16	18					
				1	1	1					
04	Y DUCT WALL	024	1	04	16	18					
				1	1	1					
05	Y DUCT WALL	025	1	05	19	21	23				
				1	1	1	2				
06	Y DUCT WALL	026	1	06	17	21	24	28			
				1	2	1	2	1			
07	Y DUCT WALL	027	1	07	11	17	21	25			
				1	1	2	1	2			
08	Y DUCT WALL	028	1	08	17	19	26				
				1	1	1	2				
09	Y DUCT WALL	029	1	09	17	21	27				
				1	1	1	2				
10	COLLECTOR FLANGE	030	2	22							
				1							

ITEM NOS. 29 TO 35 ARE SENT AS LOOSE DUES. 031 TO 037

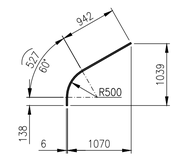

ITEM NO. 05

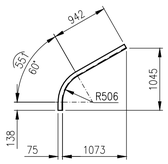

ITEM NO. 23

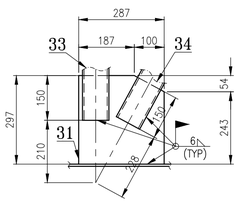

DETAIL – A2

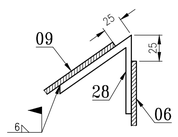

DETAIL – A

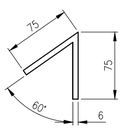

ITEM NO. 28

VARIANT NUMBER	ITEM NUMBER	DESCRIPTION	STD	DRAWING NUMBER	ITEM NO / VAR NO	MATERIAL CODE / MATERIAL SPECN	X-SC/P / DI	UNIT /	UNIT WEIGHT / QUANTITY	GS
	35	PLATE 10 75x100			152110980000				0.580	
					IS2062 E250A				2	
	34	PIPE ø88.90X5.49 3267			151821380000				36.880	
					SA106 GrB				1	
	33	PIPE ø88.90X5.49 2978			151821380000				33.620	
					SA106 GrB				2	
	32	PLATE 10 536x297			152110980000				11.920	
					IS2062 E250A				1	
	31	PLATE 10 287x297			152110980000				6.480	
					IS2062 E250A				1	
	30	PLATE 10 189x175			152110980000				2.080	
					IS2062 E250A				2	
	29	ISMB 125 2800			150090360000				37.500	
					IS2062 E250A				2	
	28	PLATE 6 150x3412			152110920000				24.100	
					IS2062 E250A				1	
	27	ISA 75X75X6 1357			150130050000				9.220	
					IS2062 E250A				2	
	26	ISA 75X75X6 2511			150130050000				17.070	
					IS2062 E250A				2	
	25	ISA 75X75X6 1678.5			150130050000				11.410	
					IS2062 E250A				2	
	24	ISA 75X75X6 2151			150130050000				14.620	
					IS2062 E250A				2	
	23	ISA 75X75X6 1631			150130050000				11.090	
					IS2062 E250A				2	
	22	ISA 75X75X6 2912			150130050000				19.800	
					IS2062 E250A				2	
	21	ISA 75X75X6 3562			150130050000				24.220	
					IS2062 E250A				4	
	20	ISA 75X75X6 2912			150130050000				19.800	
					IS2062 E250A				2	
	19	ISMC 150 3712			150100350000				62.360	
					IS2062 E250A				2	
	18	ISMC 150 5812			150100350000				97.640	
					IS2062 E250A				2	
	17	ISMC 150 3326			150100350000				55.870	
					IS2062 E250A				6	
	16	ISMC 100 C.T.S 5972			150100030000				57.090	
					IS2062 E250A				2	
	15	ISMC 100 C.T.S 5458			150100030000				52.170	
					IS2062 E250A				2	
	14	ISMC 100 C.T.S 565			150100030000				5.400	
					IS2062 E250A				2	
	13	ISMC 100 C.T.S 1022			150100030000				9.770	
					IS2062 E250A				2	
	12	ISMC 100 2826			150100030000				27.010	
					IS2062 E250A				2	
	11	PLATE 6 125x3350			152110920000				19.720	
					IS2062 E250A				1	
	10	PLATE 6 C.T.S 125x5822			152110920000				34.280	
					IS2062 E250A				2	
	09	PLATE 6 C.T.S 1332x3350			152110920000				210.160	
					IS2062 E250A				1	
	08	PLATE 6 2500x3350			152110920000				394.460	
					IS2062 E250A				1	
	07	PLATE 6 1667.5x3350			152110920000				263.100	
					IS2062 E250A				1	
	06	PLATE 6 2080x3350			152110920000				328.190	
					IS2062 E250A				1	
	05	PLATE 6 1607x3350			152110920000				253.560	
					IS2062 E250A				1	
	04	PLATE 6 2167.5x6138			152110920000				595.980	
					IS2062 E250A				1	
	03	PLATE 6 2167.5x6138			152110920000				595.980	
					IS2062 E250A				1	
	02	PLATE 6 2000x5726			152110920000				417.350	
					IS2062 E250A				1	
	01	PLATE 6 2000x5726			152110920000				417.350	
					IS2062 E250A				1	

REV	DATE	ALTERED :
ZONE		CHD & APPD :

CAUTION: The information on this document is the property of BHARAT HEAVY ELECTRICALS LTD. It must not be used directly or indirectly in any way detrimental to the interest of the company.

TYPE OF PRODUCT OR NAME OF CUSTOMER/PROJECT

355-053

Bharat Heavy Electricals Ltd
UNIT: HIGH PRESSURE BOILER PLANT
TIRUCHIRAPALLI – 620014

	NAME	SIGNATURE	DATE
DRN	EOL/VAD		29.06.2015
CHD	S.GANESAN		14.07.2015
APPD	GAUTAM		14.07.2015

DEPT	ALL DIMENSIONS ARE IN MM	PROJECTION	SCALE	WEIGHT (Kg)	REF TO ASSY / OLD DWG
DU			1 : 50	5052.350	
CODE 124					

TITLE: Y DUCT

DRAWING NO : 1-48-462-43172

REV 0