FIRST ANGLE PROJECTION (ALL DIMENSIONS ARE IN MM)

DRAWING NUMBER 1-30-134-10001/S

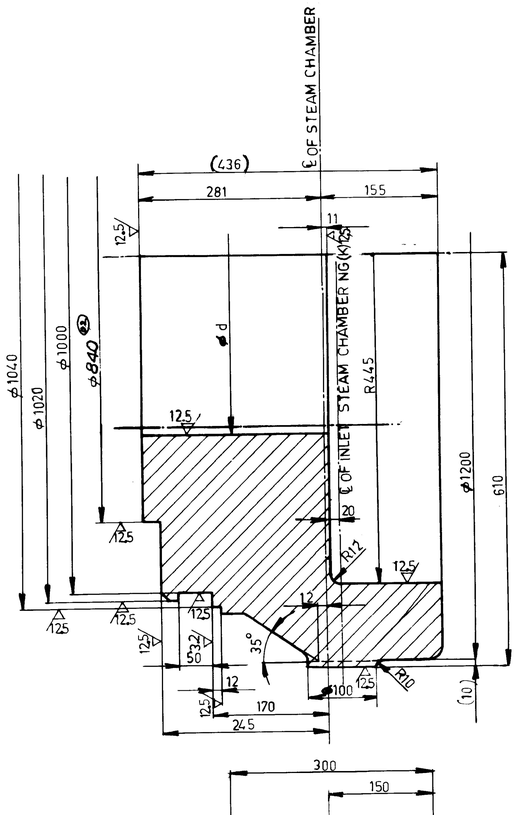

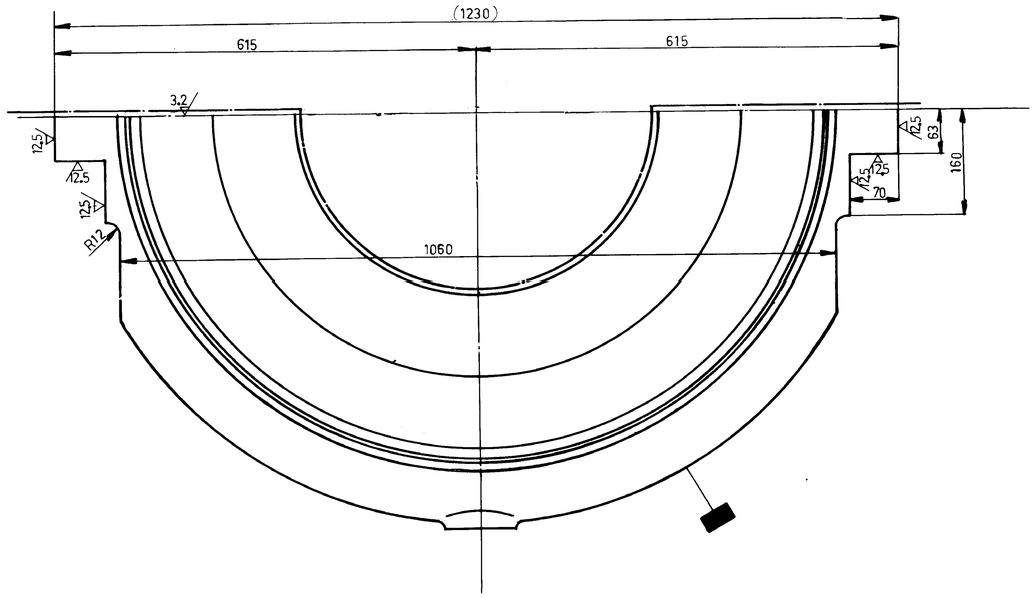

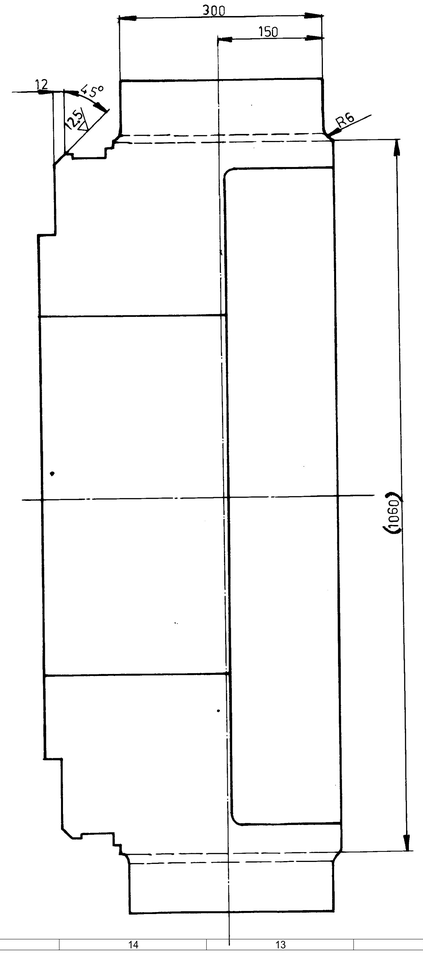

NOTES AS PER DRAWING NO. 0-30134-10001-XX

TC9217008230	660	HY19570	GP 240 GH	835	17
TC9217008214	660	HY19570	GP 240 GH	835	16
	640		GS C25	910	15
	640		GS 22Mo4	910	14
	640		GS 17CrMo55	910	13
	640		GS 17CrMoV511	910	12
	620		GS C25	870	11
TC9217107522	620	HY19571	GS 22Mo4	870	10
	620		GS 17CrMo55	870	09
	620		GS 17CrMoV511	870	08
	530		GS C25	960	07
TC 921 71 07 778	530	HY19571	GS 22Mo4	960	06
	530		GS 17CrMo55	960	05
	530		GS 17CrMoV511	960	04
	730		GS C25	740	03
	730		GS 22Mo4	740	02
	730		GS 17CrMo55	740	01
	730		GS 17CrMoV511	740	00
MATERIAL CODE	φd	PLANT PURCHASE SPECIFICATION	MATERIAL (OLD)	Wt. Kg	VAR XX

REV	DATE	ALTERED / CHECKED	REV	DATE	ALTERED / CHECKED	REV	DATE	ALTERED / CHECKED
ZONE			ZONE			ZONE		

BHARAT HEAVY ELECTRICALS. LTD.
CENTRAL FOUNDRY FORGE PLANT
RANIPUR HARDWAR

DEPTT. FDY.TECH. | SCALE N.T.S. | WEIGHT

TITLE STEAM CHAMMBER N63 LOWER HALF (BZ)

	NAME	SIGN	DATE
DRN			
WKD	NK GAURAV		
CHD	R. LAKRA		
APPD	T. DAVE		

PROJECT AND CUSTOMER NAME -- --
TECHNOLOGY NO --
DRAWING NO. 1-301-34-10001/S
SHEET NO.-1 NO. OFF SHEETS-1