FIRST ANGLE PROJECTION

(ALL DIMENSIONS ARE IN mm)

DRAWING NO. 0 718 31 01 101

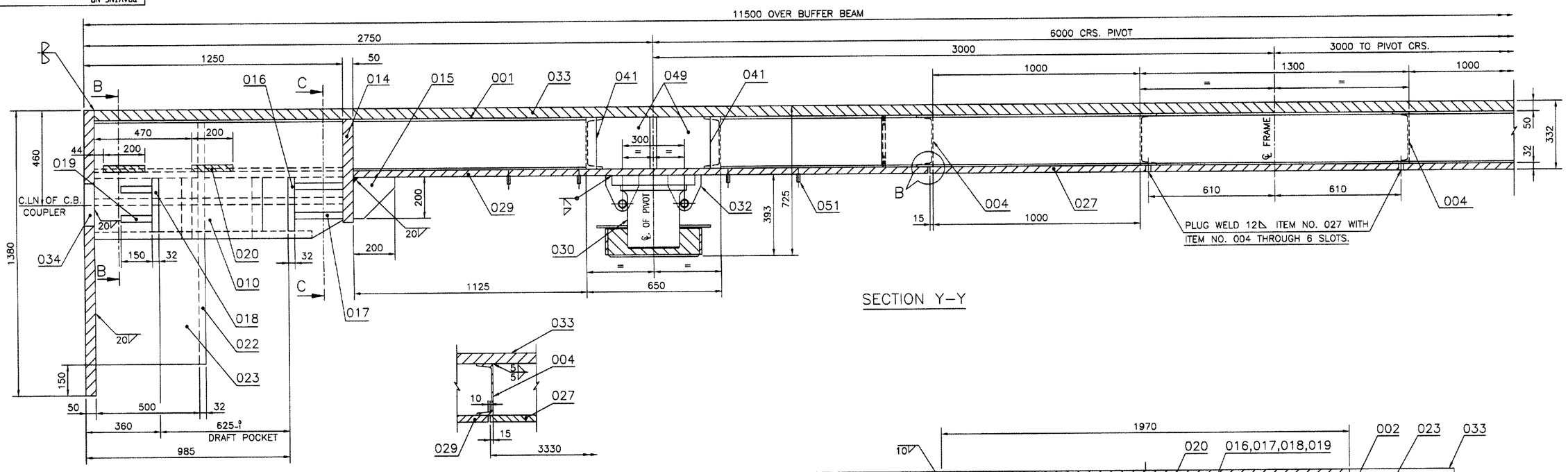

SECTION Y–Y

DETAIL–B

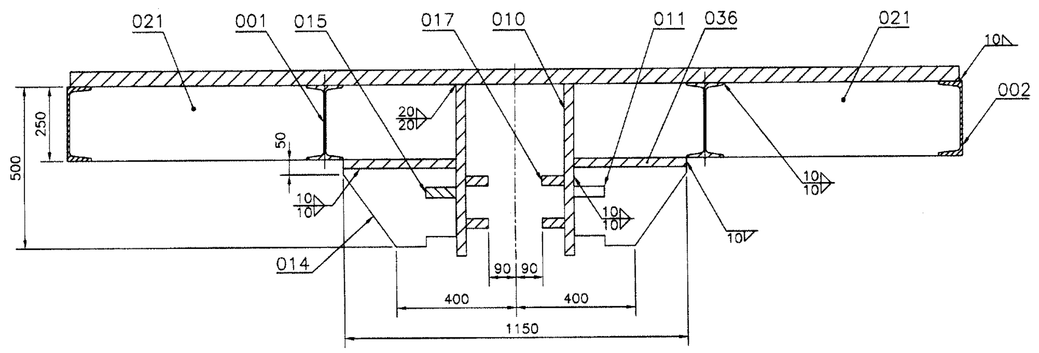

SECTION C–C

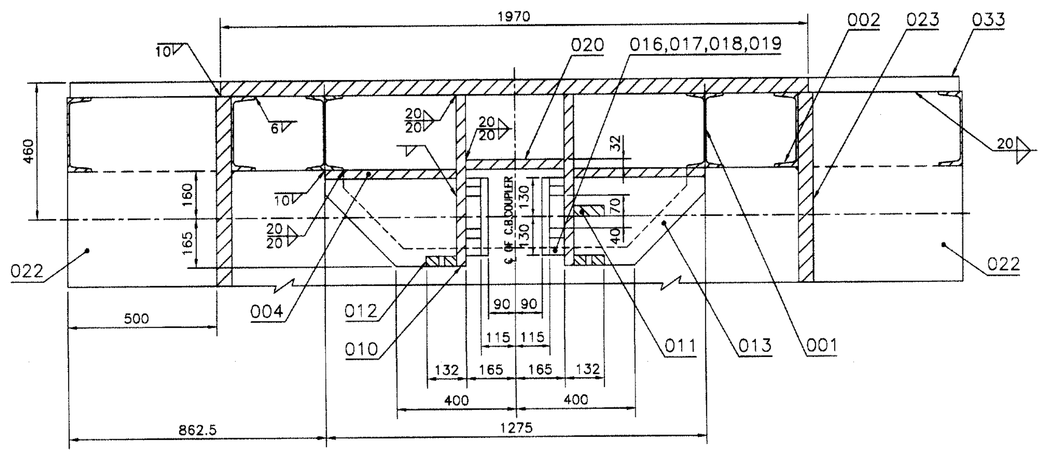

SECTION B–B

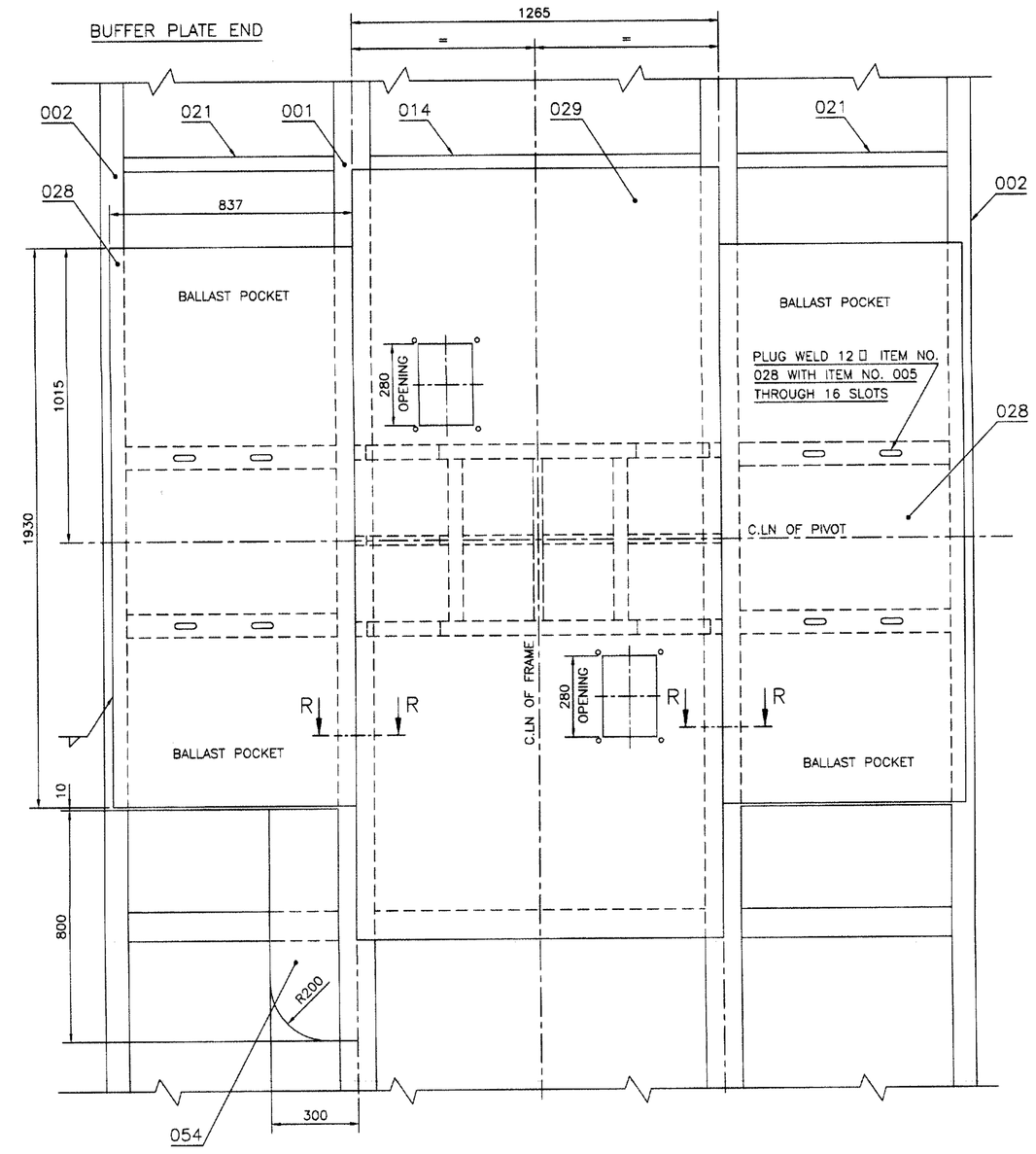

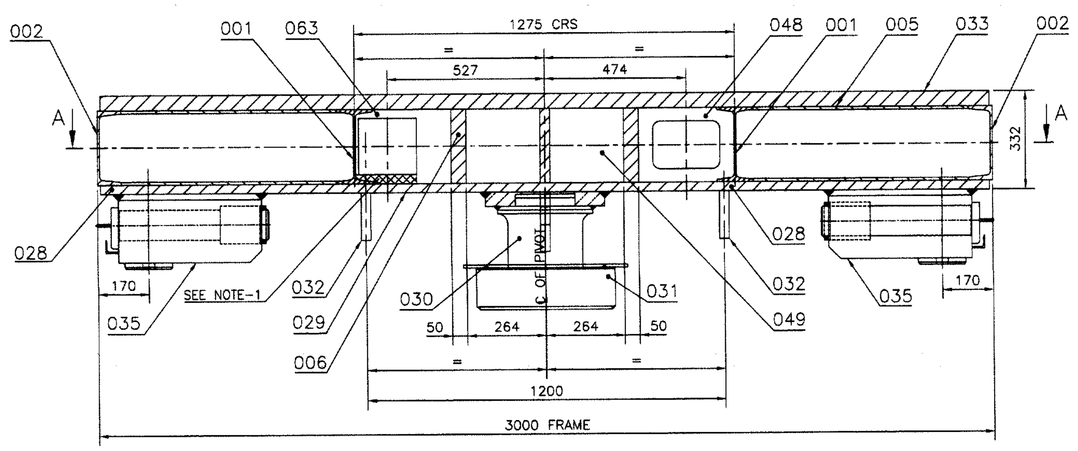

SECTION X–X

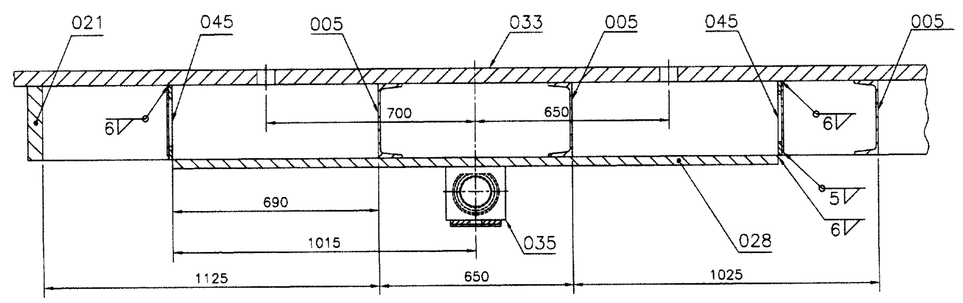

BUFFER PLATE END

SECTION E–E

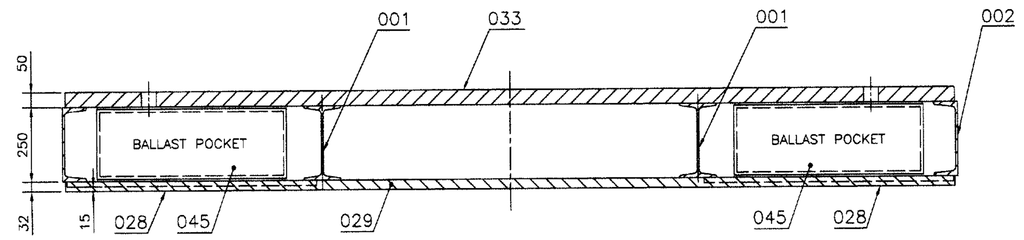

SECTION D–D

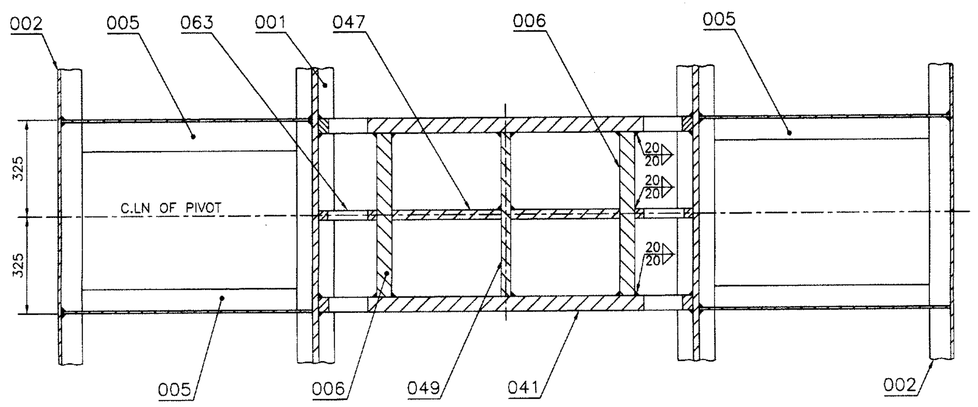

SECTION A–A

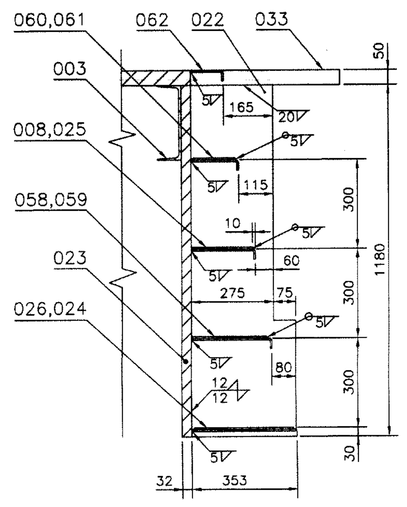

SECTION Z–Z

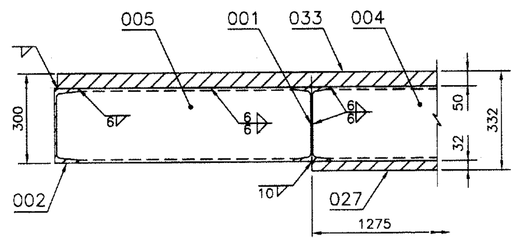

SECTION U–U

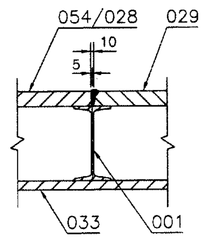

SECTION R–R

NOTE:–

1. HATCHED PORTION TO BE REMOVED FOR INSERTING AIR DUCT IN U/FRAME AND THEN REMOVED CUT OFF PIECE TO BE WELDED IN POSITION AFTER INSERTING AIR DUCT.

VAR. NO	REMARKS	VAR NO.	ITEM NO.	DESCRIPTION	ETD	DRAWING NO.	IT. NO / VAR.	MATL. CODE / MATL. SPECN	A / C	UNIT	UNIT WT. (Kg.) / QTY.	SIGN	DATE
CARD TYPE – 3							CARD TYPE – 1				CARD TYPE – 2		

ADDITIONAL INFORMATION

STATUS OF DRAWING U

DISTRIBUTION OF PRINTS
LME (DV) – 1
LMP (DV) – 2
LMM (DV) – 3

REV	DATE	ALTERED	SIGN
18	04.02.15	CHECKED / APPD.	Sd/–

TYPE OF PRODUCT 700 HP DESL TPP
OR
NAME OF CUSTOMER/PROJECT

BHARAT HEAVY ELECTRICALS LTD.
JHANSI

	NAME	SIGN	DATE
DRN	Rajesh	Sd/–	07.11.16
CKD	Santosh	Sd/–	11.11.16
APPD	S.K.K.	Sd/–	11.11.16

NO. OF VAR 01

DEPT LME CODE 404 | GRADE OF UN. TOL. DIN GM/M | SCALE 1 : 10 | WEIGHT (KG) --- | REF. TO ASSY. NO. -- | ITEM NO. -- | NO. OF ITEM --

TITLE SECTION & DETAILS OF UNDERFRAME

CARD CODE | DRAWING NO. 0 718 31 01 101 | REV. 19

SHEET NO. 02 | NO. OF SHEETS 02

SIZE A0

REV	DATE	ALTERED	SIGN
19	11-11-16	CHECKED / APPD.	

SHEET NO 02 OF 02 ADDED. NOTE–1 MODIFIED. AND DRG. UPDATED AND REDRAWN.

THE INFORMATION ON THIS DOCUMENT IS THE PROPERTY OF BHARAT HEAVY ELECTRICALS LIMITED. IT MUST NOT BE USED DIRECTLY OR INDIRECTLY IN ANY WAY DETRIMENTAL TO THE INTEREST OF THE COMPANY.

INVENTORY NO. | SIGN & DATE | REF. DRG. NO.