DRAWING NO. 0-55-227-01649

ALL DIMENSIONS ARE IN MILLIMETRES

FOR PRODUCTION
REF. PR:QA:590 FOR PAINTING
REF. PR:QA:500 FOR UNTOL, DWWS.
REF. APPLICABLE CMS FOR MATCODE&SPEC.

## VIEW-Y

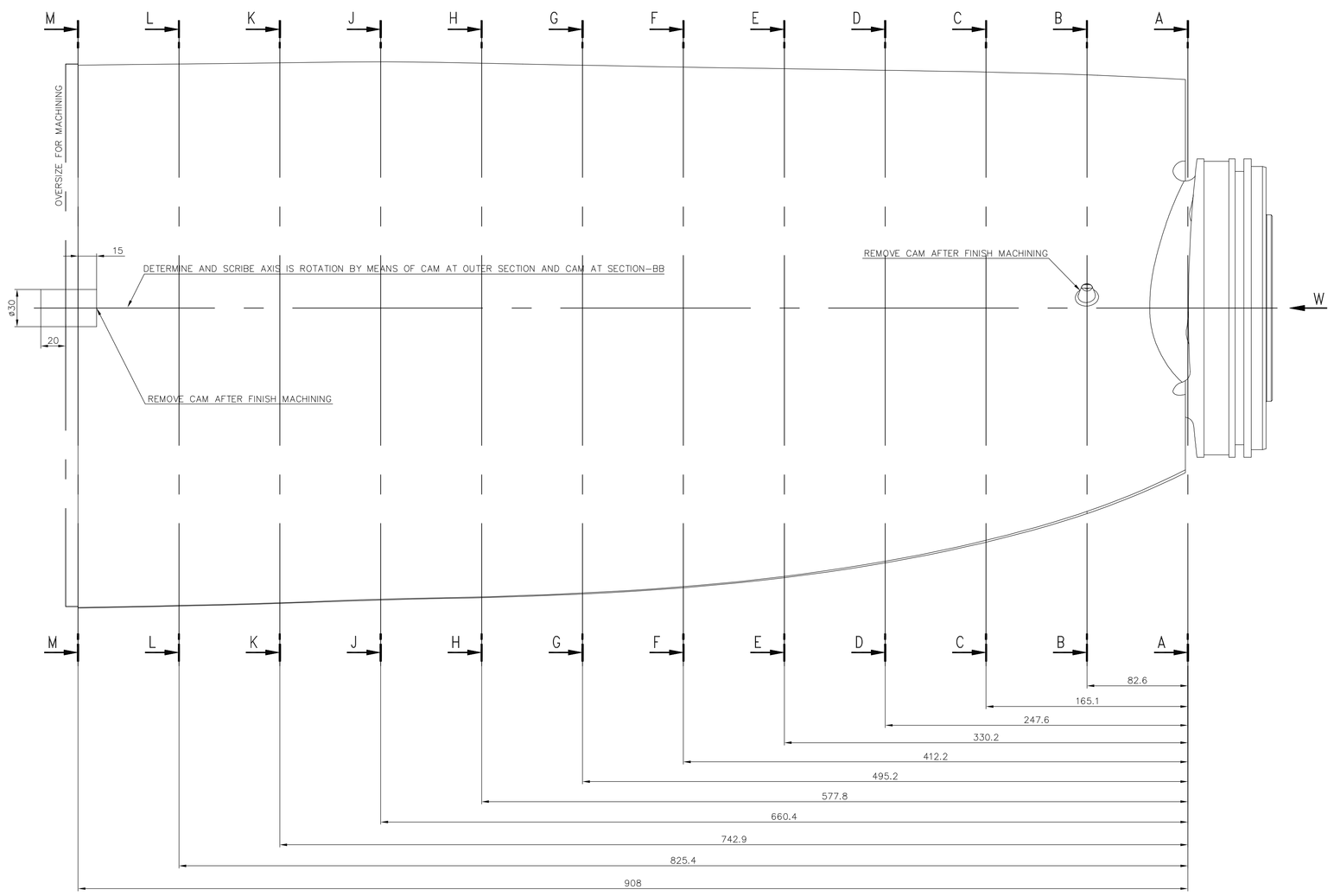


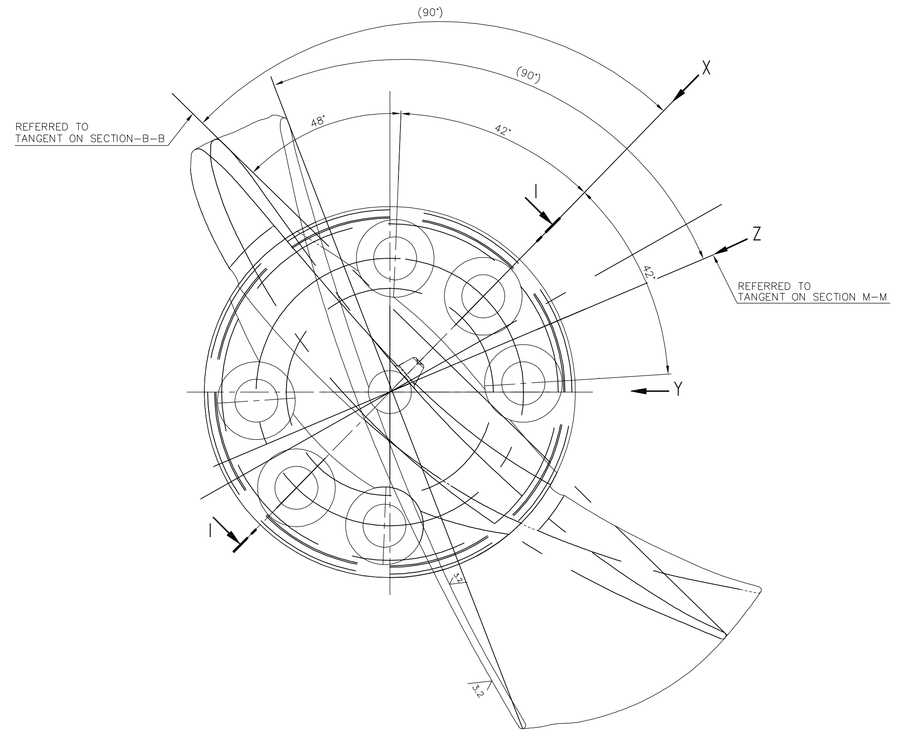


## SECTION-II

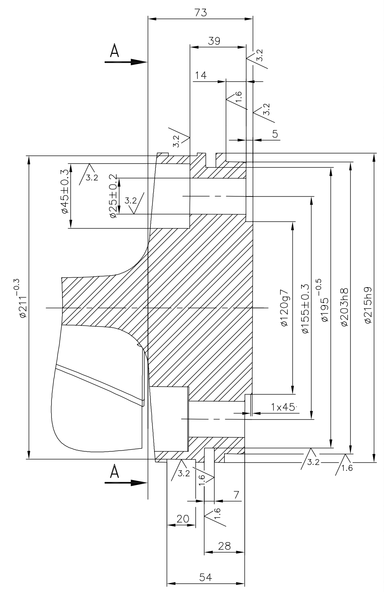


## VIEW-W

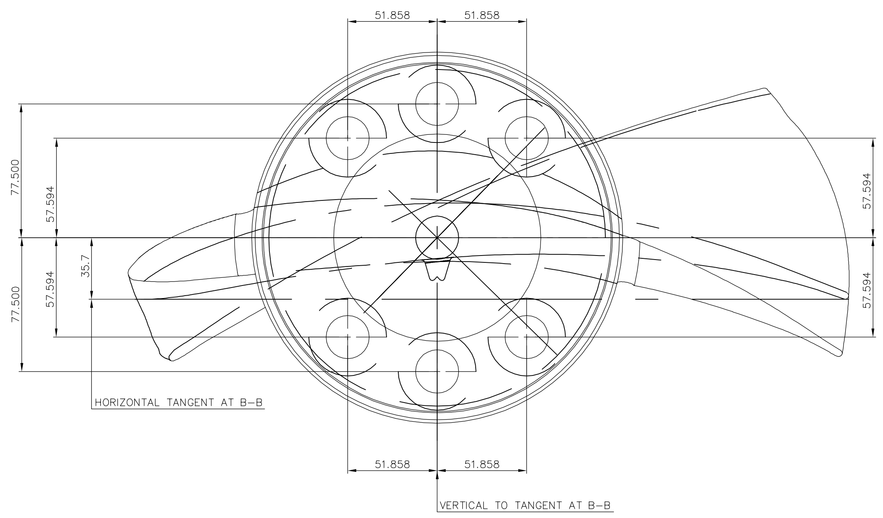


## LEADING EDGE

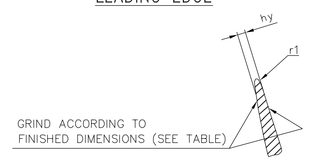


## TRAILING EDGE

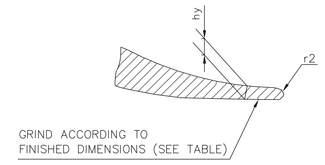


## PROFILE DIMENSIONS

| SECTION | A-A | B-B | C-C | D-D | E-E | F-F | G-G | H-H | J-J | K-K | L-L | M-M |
|---|---|---|---|---|---|---|---|---|---|---|---|---|
| HUB RATIO | 1 | 0.92 | 0.85 | 0.79 | 0.74 | 0.7 | 0.66 | 0.62 | 0.59 | 0.56 | 0.53 | 0.51 |
| øD [mm] | 1884 | 2049 | 2214 | 2379 | 2544 | 2710 | 2875 | 3040 | 3205 | 3370 | 3535 | 3700 |
| R [mm] | 489 | 575 | 658 | 745 | 826 | 897 | 957 | 1009 | 1055 | 1095 | 1132 | 1166 |
| L [mm] | 416 | 413 | 410 | 407 | 403 | 400 | 396 | 393 | 389 | 386 | 383 | 380 |
| LT [mm] | 416.6 | 413.5 | 410 | 406.7 | 403.4 | 399.9 | 396.3 | 392.6 | 389.2 | 385.9 | 382.7 | 379.6 |
| M [mm] | 175.9 | 175.1 | 173.8 | 173.7 | 173.9 | 174.1 | 173.8 | 173.6 | 174 | 172.7 | 171.4 | 170.2 |
| P [mm] | 43.7 | 35.7 | 30.1 | 24.3 | 20.2 | 16.7 | 13.8 | 11.1 | 8.6 | 6.4 | 4.2 | 2.2 |
| f [mm] | 27.2 | 23.6 | 19.0 | 19.3 | 18.3 | 17.4 | 16.4 | 15.6 | 15.2 | 14.3 | 13.5 | 12.8 |
| α [°] | 0.3 | 0.2 | 0.2 | 0 | 0 | 0 | 0 | 0 | 0 | 0 | 0 | 0 |
| β [°] | 52.5 | 45.9 | 40.9 | 36.9 | 33.7 | 31 | 28.8 | 26.9 | 25.2 | 23.8 | 22.5 | 21.4 |
| $\gamma_m$ [°] | 37.5 | 44.1 | 49.1 | 53.1 | 56.3 | 59 | 61.2 | 63.1 | 64.8 | 66.2 | 67.5 | 68.6 |
| ε m [°] | 52.3 | 45.7 | 40.7 | 36.9 | 33.7 | 31.0 | 28.8 | 26.8 | 25.2 | 23.7 | 22.5 | 21.3 |
| $r_1$ [mm] | 4.3 | 3.4 | 3.2 | 2.1 | 2.1 | 2.1 | 2.1 | 2.1 | 2.1 | 2.1 | 2.1 | 2.1 |
| $r_2$ [mm] | 2.1 | 2.1 | 2.1 | 2.1 | 2.1 | 2.1 | 2.1 | 2.1 | 2.1 | 2.1 | 2.1 | 2.1 |
| $d_{max}/2$ [mm] | 21.5 | 16.8 | 16.1 | 10.6 | 8.3 | 6.9 | 6.1 | 5.5 | 4.9 | 4.8 | 4.8 | 4.7 |
| d/L [%] | 10.3 | 8.1 | 7.8 | 5.2 | 4.1 | 3.4 | 3.1 | 2.8 | 2.5 | 2.5 | 2.5 | 2.5 |

| X [%] | PROFILE THICKNESS hy [mm] AT x [%] OF TANGENT LENGTH (FINISHED DIMENSIONS) | | | | | | | | | | |
|---|---|---|---|---|---|---|---|---|---|---|---|
| 1.25 | 13.2 | 10.4 | 9.8 | 6.8 | 6.2 | 6.0 | 5.9 | 5.8 | 5.7 | 5.7 | 5.6 | 5.6 |
| 2.5 | 18.5 | 14.2 | 13.4 | 9.2 | 7.6 | 6.7 | 6.5 | 6.3 | 6.0 | 6.0 | 5.9 | 5.9 |
| 5 | 25.5 | 19.4 | 18.2 | 11.9 | 9.2 | 7.6 | 6.9 | 6.3 | 5.9 | 5.8 | 5.8 | 5.7 |
| 7.5 | 30.3 | 23.2 | 21.8 | 14.2 | 11.0 | 9.1 | 8.1 | 7.3 | 6.5 | 6.4 | 6.4 | 6.3 |
| 10 | 33.6 | 25.8 | 24.3 | 15.8 | 12.3 | 10.2 | 9.1 | 8.1 | 7.2 | 7.1 | 7.0 | 7.0 |
| 15 | 38.2 | 29.4 | 27.8 | 18.2 | 14.2 | 11.7 | 10.5 | 9.4 | 8.3 | 8.2 | 8.1 | 8.1 |
| 20 | 41 | 31.8 | 30.1 | 19.7 | 15.4 | 12.7 | 11.4 | 10.2 | 9.0 | 8.9 | 8.8 | 8.8 |
| 30 | 43.5 | 33.9 | 32.3 | 21.2 | 16.6 | 13.8 | 12.3 | 11.0 | 9.7 | 9.7 | 9.6 | 9.5 |
| 40 | 41.8 | 32.7 | 31.2 | 20.5 | 16.1 | 13.3 | 11.9 | 10.7 | 9.4 | 9.4 | 9.3 | 9.2 |
| 50 | 37.9 | 29.7 | 28.3 | 18.6 | 14.6 | 12.1 | 10.8 | 9.7 | 8.6 | 8.5 | 8.4 | 8.4 |
| 60 | 32.9 | 25.6 | 24.4 | 16 | 12.5 | 10.4 | 9.3 | 8.3 | 7.4 | 7.3 | 7.3 | 7.2 |
| 70 | 26.3 | 20.3 | 19.3 | 12.6 | 9.9 | 8.2 | 7.3 | 6.5 | 5.8 | 5.8 | 5.7 | 5.7 |
| 80 | 18.9 | 14.5 | 13.7 | 8.9 | 7.0 | 5.8 | 5.4 | 5.0 | 4.7 | 4.7 | 4.6 | 4.6 |
| 90 | 10.8 | 8.2 | 7.7 | 5.2 | 4.6 | 4.4 | 4.3 | 4.2 | 4.2 | 4.2 | 4.2 | 4.2 |
| 95 | 6.4 | 5.3 | 5 | 4.3 | 4.3 | 4.2 | 4.2 | 4.2 | 4.2 | 4.2 | 4.2 | 4.2 |
| 97.5 | 5.2 | 4.8 | 4.6 | 4.5 | 4.5 | 4.4 | 4.4 | 4.4 | 4.4 | 4.4 | 4.4 | 4.4 |

| X [%] | DISTANCE hd [mm] AT X [%] OF TANGENTIAL LENGTH (FINISHED DIMENSIONS) | | | | | | | | | | | |
|---|---|---|---|---|---|---|---|---|---|---|---|---|
| 0 | 5.1 | 3.9 | 4 | 2.3 | 2.2 | 2.2 | 2.3 | 2.3 | 2.3 | 2.3 | 2.3 | 2.3 |
| 1.25 | 0.5 | 0.2 | 0.3 | 0.2 | 0.1 | 0 | 0 | 0 | 0 | 0 | 0 | 0 |
| 2.5 | 0 | 0.1 | 0 | 0.1 | 0.4 | 0.6 | 0.6 | 0.6 | 0.6 | 0.6 | 0.6 | 0.5 |
| 5 | 0.7 | 1.0 | 0.6 | 1.5 | 2.0 | 2.4 | 2.4 | 2.4 | 2.4 | 2.3 | 2.2 | 2.1 |
| 7.5 | 2.2 | 2.4 | 1.6 | 2.7 | 3.3 | 3.6 | 3.6 | 3.6 | 3.7 | 3.5 | 3.3 | 3.2 |
| 10 | 4.2 | 4.2 | 2.9 | 4.2 | 4.7 | 4.9 | 4.8 | 4.8 | 4.9 | 4.6 | 4.3 | 4.1 |
| 15 | 8.5 | 7.9 | 5.9 | 7.3 | 7.5 | 7.5 | 7.2 | 7.0 | 7.0 | 6.6 | 6.2 | 5.9 |
| 20 | 12.8 | 11.6 | 8.9 | 10.1 | 10.1 | 9.9 | 9.4 | 9.1 | 9.0 | 8.4 | 7.9 | 7.5 |
| 30 | 20.2 | 17.8 | 14 | 14.9 | 14.4 | 13.8 | 13.1 | 12.5 | 12.2 | 11.4 | 10.8 | 10.2 |
| 40 | 26.2 | 22.7 | 18.2 | 18.6 | 17.6 | 16.7 | 15.7 | 15 | 14.5 | 13.6 | 12.9 | 12.2 |
| 50 | 29.7 | 25.6 | 20.8 | 20.6 | 19.4 | 18.2 | 17.1 | 16.2 | 15.6 | 14.7 | 13.9 | 13.2 |
| 60 | 30.4 | 26 | 21.3 | 20.8 | 19.4 | 18.2 | 17 | 16.1 | 15.5 | 14.6 | 13.8 | 13.2 |
| 70 | 28.3 | 24.1 | 19.9 | 19.1 | 17.7 | 16.6 | 15.5 | 14.7 | 14.1 | 13.3 | 12.6 | 12 |
| 80 | 22.7 | 19.3 | 16.1 | 15.3 | 14.2 | 13.2 | 12.3 | 11.6 | 11.0 | 10.4 | 9.9 | 9.5 |
| 90 | 13.5 | 11.6 | 9.8 | 9.2 | 8.4 | 7.6 | 7.1 | 6.6 | 6.2 | 5.8 | 5.5 | 5.3 |
| 95 | 7.4 | 6.3 | 5.4 | 4.8 | 4.2 | 3.8 | 3.5 | 3.3 | 3.1 | 2.9 | 2.7 | 2.6 |
| 97.5 | 3.3 | 2.8 | 2.4 | 2.0 | 1.8 | 1.6 | 1.5 | 1.4 | 1.3 | 1.2 | 1.1 | 1.1 |
| 100 | 2.1 | 2.1 | 2.1 | 2.1 | 2.1 | 2.1 | 2.1 | 2.1 | 2.1 | 2.1 | 2.1 | 2.1 |

| X [%] | DISTANCE hs [mm] AT X [%] OF TANGENTIAL LENGTH (FINISHED DIMENSIONS) | | | | | | | | | | | |
|---|---|---|---|---|---|---|---|---|---|---|---|---|
| 0 | 94.9 | 96.1 | 96 | 97.7 | 97.8 | 97.8 | 97.7 | 97.7 | 97.7 | 97.7 | 97.7 | 97.7 |
| 1.25 | 86.4 | 89.4 | 89.9 | 93 | 93.7 | 94 | 94.1 | 94.2 | 94.3 | 94.3 | 94.4 | 94.4 |
| 2.5 | 81.5 | 85.7 | 86.6 | 90.7 | 92 | 92.7 | 92.9 | 93.1 | 93.4 | 93.4 | 93.5 | 93.6 |
| 5 | 73.7 | 79.5 | 81.1 | 86.7 | 88.8 | 90 | 90.7 | 91.3 | 91.7 | 91.9 | 92.1 | 92.2 |
| 7.5 | 67.5 | 74.4 | 76.6 | 83.1 | 85.7 | 87.3 | 88.3 | 89.1 | 89.9 | 90.1 | 90.3 | 90.5 |
| 10 | 62.2 | 70.1 | 72.8 | 79.9 | 83 | 84.9 | 86.1 | 87.1 | 88.0 | 88.3 | 88.6 | 88.9 |
| 15 | 53.3 | 62.7 | 66.3 | 74.6 | 78.3 | 80.8 | 82.3 | 83.6 | 84.7 | 85.2 | 85.7 | 86.1 |
| 20 | 46.2 | 56.7 | 61 | 70.2 | 74.5 | 77.4 | 79.2 | 80.7 | 82.0 | 82.7 | 83.2 | 83.7 |
| 30 | 36.3 | 48.3 | 53.7 | 63.9 | 69.0 | 72.4 | 74.6 | 76.5 | 78.1 | 78.9 | 79.6 | 80.3 |
| 40 | 32.1 | 44.6 | 50.6 | 60.9 | 66.3 | 70.0 | 72.4 | 74.4 | 76.1 | 77.0 | 77.9 | 78.6 |
| 50 | 32.3 | 44.7 | 50.9 | 60.8 | 66.1 | 69.7 | 72.1 | 74.1 | 75.8 | 76.8 | 77.7 | 78.4 |
| 60 | 36.7 | 48.3 | 54.2 | 63.2 | 68.1 | 71.5 | 73.7 | 75.6 | 77.2 | 78.1 | 78.9 | 79.6 |
| 70 | 45.5 | 55.6 | 60.8 | 68.3 | 72.4 | 75.3 | 77.2 | 78.8 | 80.1 | 80.9 | 81.6 | 82.3 |
| 80 | 58.4 | 66.1 | 70.2 | 75.7 | 78.8 | 80.9 | 82.3 | 83.4 | 84.3 | 84.9 | 85.5 | 85.9 |
| 90 | 75.8 | 80.3 | 82.6 | 85.6 | 87.0 | 88.0 | 88.7 | 89.2 | 89.6 | 90.0 | 90.3 | 90.5 |
| 95 | 86.3 | 88.4 | 89.6 | 90.9 | 91.5 | 91.9 | 92.3 | 92.5 | 92.7 | 92.9 | 93.1 | 93.2 |
| 97.5 | 91.5 | 92.4 | 93.0 | 93.5 | 93.8 | 94.0 | 94.1 | 94.3 | 94.4 | 94.4 | 94.5 | 94.6 |
| 100 | 97.9 | 97.9 | 97.9 | 97.9 | 97.9 | 97.9 | 97.9 | 97.9 | 97.9 | 97.9 | 97.9 | 97.9 |

## VIEW-Z

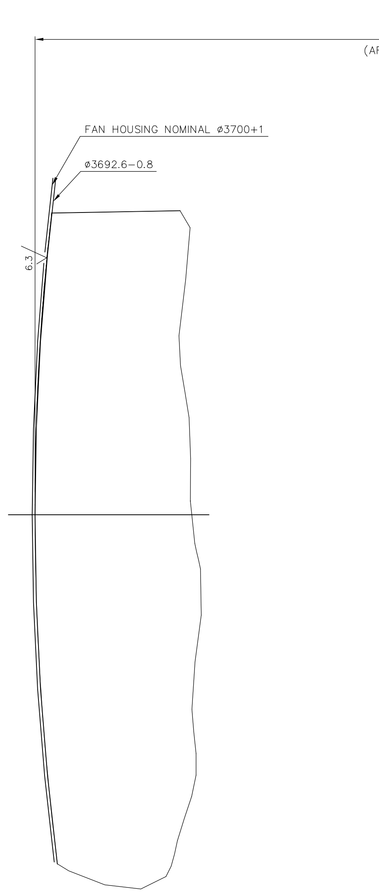


## VIEW-X

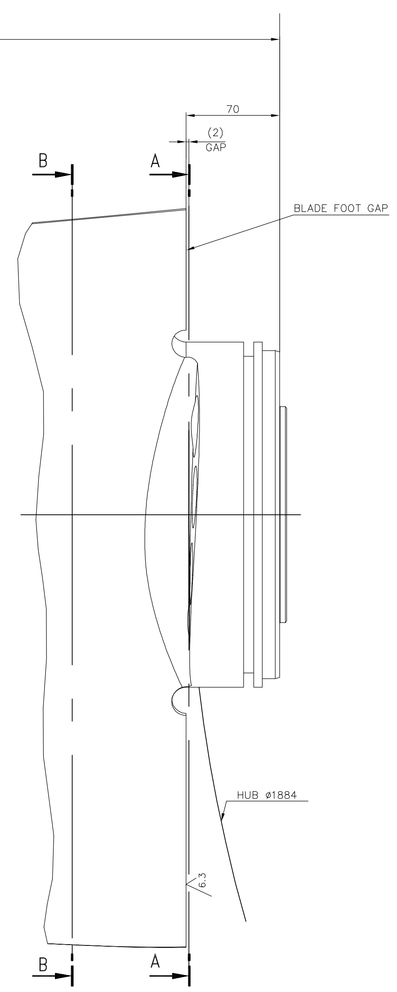


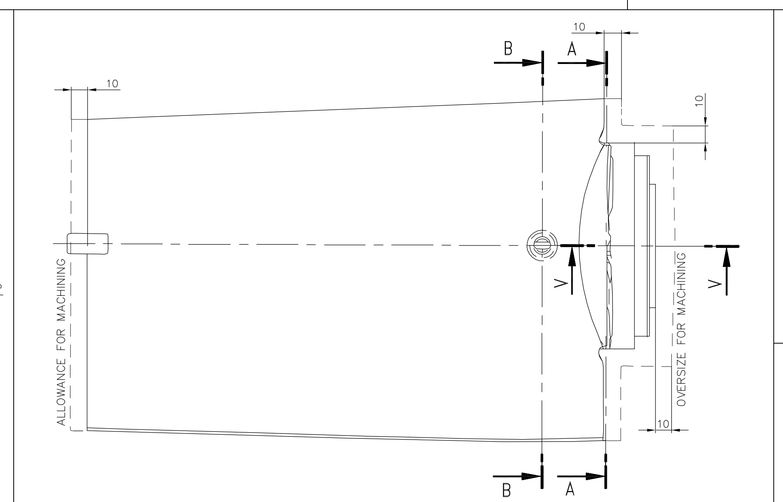


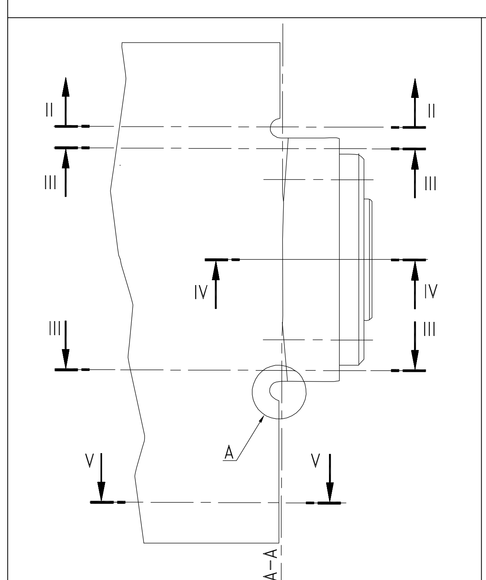


## DETAIL-A

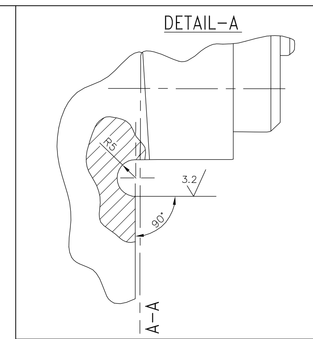


## SECTION II-II

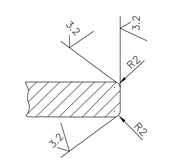


## SECTION III-III

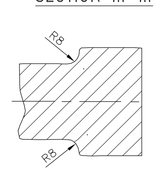


## SECTION IV-IV

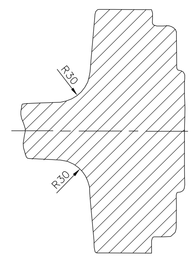


## SECTION V-V

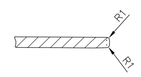


## PROFILE CROSS SECTION

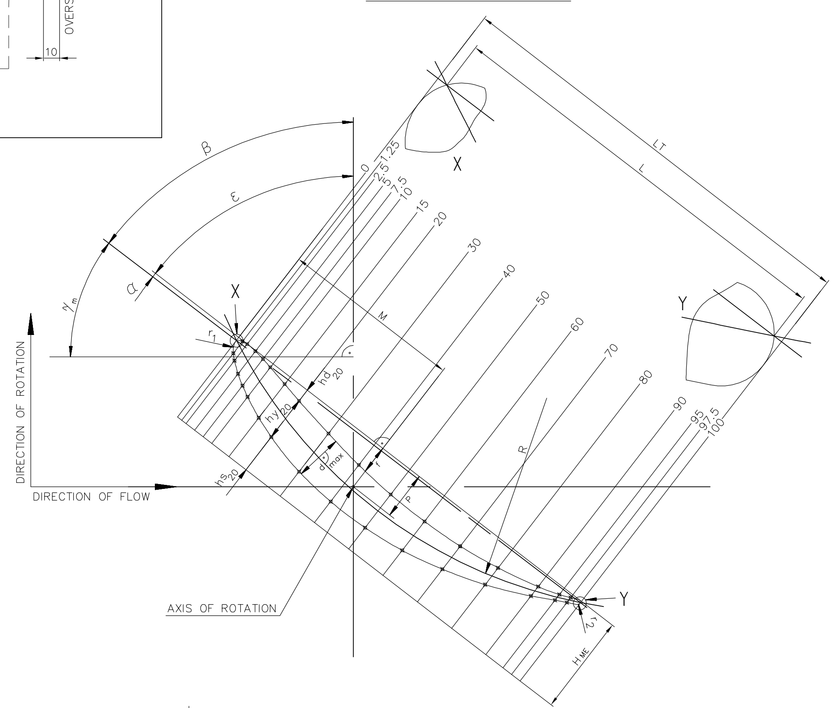


## DETAIL-B

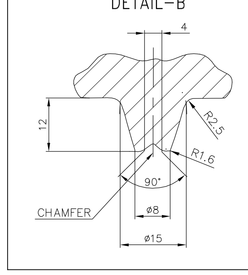


## DETAIL-V

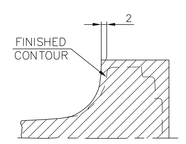


| | |
|---|---|
| ø215 h9 | 0.000 −0.115 |
| ø203h8 | 0.000 −0.072 |
| ø120 g7 | −0.012 −0.047 |
| DIMENSION | TOLERANCE |

## NOTES:-

01. OPERATING SPEED = 745 RPM
02. DENSITY OF BLADE MATERIAL 7.10 Kg/dm$^3$
03. CENTER OF GRAVITY OF BLADE AT RADIUS 1155.3 mm
04. NON DIMENSIONED FILLETS ROUNDED R0.4
05. NON DIMENSIONED EDGES CHAMFERED 0.3x45°
06. GROSS WEIGHT – 57.5 Kg

$H_{ME}$ = 150

| VAR NO | ITEM NO | DESCRIPTION | CAT | DRAWING No. | ITEM MAT. NO | MATL CODE / MATL SPECN | D P C | ZONE | UNIT WT / QTY | CS | ZONE |
|---|---|---|---|---|---|---|---|---|---|---|---|
| | 01 | BLADE NA18 -10% | | | | GGG40 | | | 45.970 / 1 | | |

TYPE OF PRODUCT SAF 37/19-1
OR NAME OF
CUSTOMER/PROJECT

BHARAT HEAVY ELECTRICALS LTD.,
UNIT: BOILER AUXILIARIES PLANT,
RANIPET – 632 406.

| | NAME | SIGN | DATE | NO.OF VAR. |
|---|---|---|---|---|
| DRN | A.PRABHA | Sd/- | 03.03.18 | -- |
| CHD | C.MANOJ | Sd/- | 03.03.18 | |
| APPD | A.V.N | Sd/- | 05.03.18 | |

| DEPT | GRADE OF UNTOL.DIM | SCALE | WEIGHT (KG). | REF. TO ASSY/OLD DRG. | ITEM no. | NO. OF ITEMS |
|---|---|---|---|---|---|---|
| FANS / CODE 864 | PR:QA:500 | N.T.S | 45.970 | 0-55-227-01331 | | |

TITLE: ROTOR BLADE (NA18 -10%)

CARD CODE: U 01

DRAWING NO. 0-55-227-01649 REV

Size A0

| REV | DATE | ALTERED / CHECKED | REV | DATE | ALTERED / CHECKED |
|---|---|---|---|---|---|
| ZONE | | | ZONE | | |

CAUTION: The information on this document is the property of BHARAT HEAVY ELECTRICALS LTD. It may not be used directly or indirectly in any way detrimental to the interest of the company.