FIRST ANGLE PROJECTION

(ALL DIMENSIONS ARE IN mm)

DRG NO 0305271006

SH OF

SECTION C-C

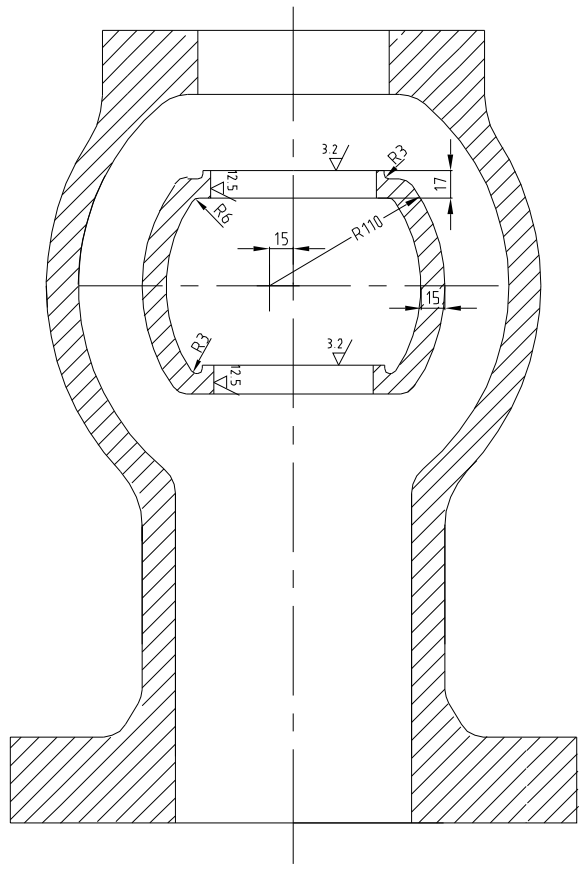

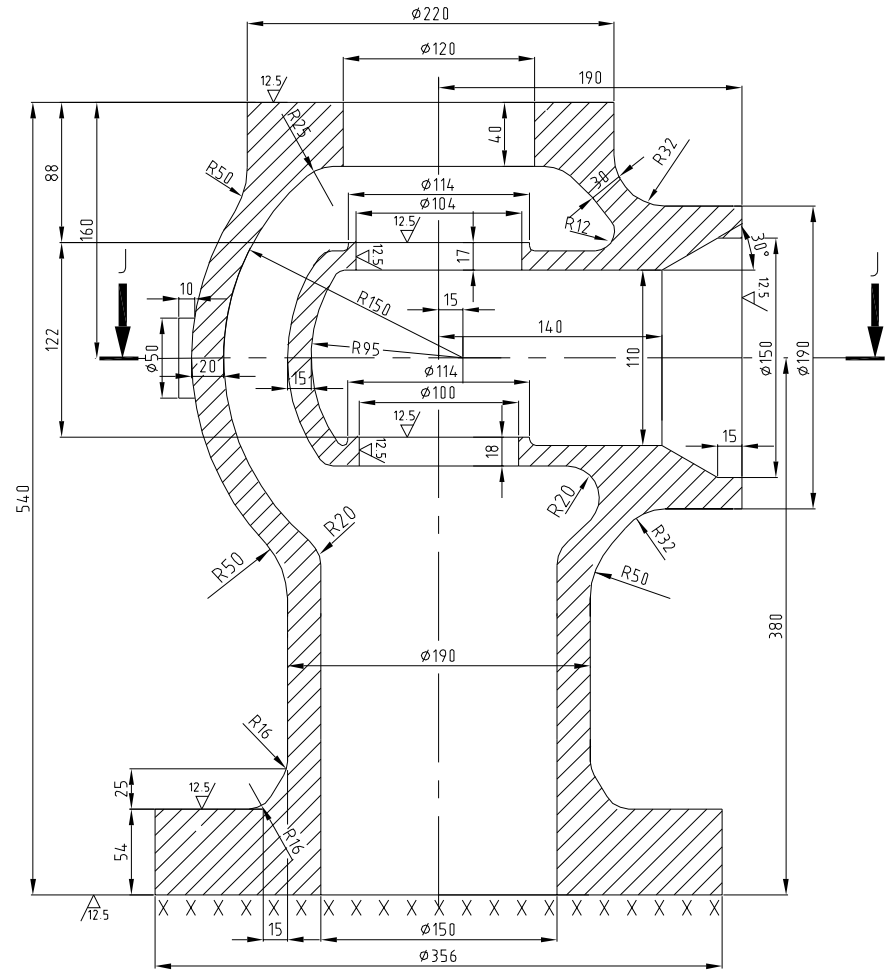

SECTION E-E

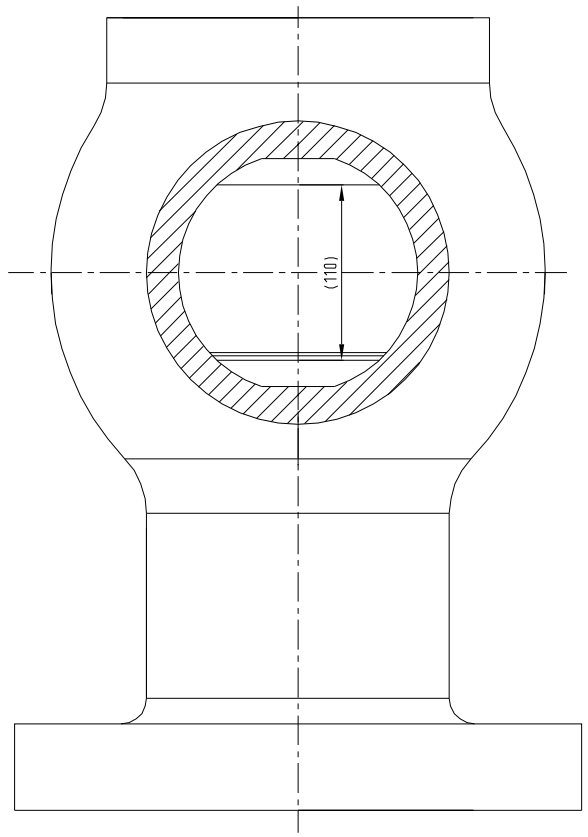

SECTION J-J

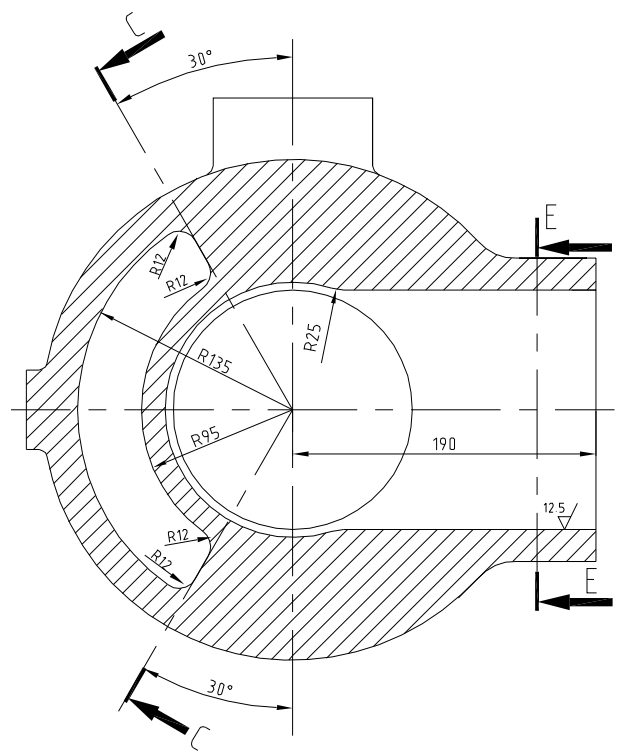

NOTES

1) CASTING SHOULD BE SUPPLIED AS PER PLANT PURCHASE PURCHASE SPECIFICATION NUMBER AS MENTIONED IN THE VARIANT TABLE
2) CASTING SHOULD NOT CONTAIN ANY CHAPLETS AND CHILLS.
3) THE GIVEN DRG. DIMENSIONS ARE WITHOUT ANY MACHINING ALLOWANCE.
4) ALLOWANCE FOR ROUGH MACHINING FOR DIMENSIONS
   UPTO 500MM 3±1 MM
   ABOVE 500MM 4±2 MM
5) CASTING TO BE SUPPLIED IN COMPLETELY ROUGH MACHINED
6) DEGREE OF ACCURACY OF CASTING AS PER DIN 1683/B
7) ALL UNMENTIONED RADII (R)=12MM.
8) MARKINGS AS PER PLANT PURCHASE SPECIFICATIONS TO BE MADE AT PLACES SHOWN THUS ▬
9) WELDING ON CORE PRINTS TO BE MARKED WITH CENTRE PUNCH IDENTIFICATION
10) POSN.1(STOP VALVE BODY) IS TO BE WELDED TO POSN.2 (CONTROL VALVE BODY) BY THE CASTING SUPPLIER AS PER WPS:WE013.
11) X-RAY TEST IS TO BE CARRIED OUT AT POSITION MARKED THUS XXXXXXX AND AT WELD ENDS AND WELD JOINTS.
12) TWO INTEGRAL KEEL BLOCKS TO BE PROVIDED AT EACH CASTING AT APPROPRIATE PLACES.

DESIGN PARAMETERS 31 BAR/400°C		
TCxxx	HY19571	00
MATL CODE	MATL SPEC	VAR

TYPE OF PRODUCT
OR
NAME OF CUSTOMER

BHARAT HEAVY ELECTRICALS LTD.
HYDERABAD

	NAME	SIGN	DATE	NO.OF VAR
DRN.	APARNA		04.10.16	
CHD	SG		04.10.16	-N.A.-
APPD.	KHS		04.10.16	

DEPT. ITD	UNTOL. DIMS. GR.	SCALE	WEIGHT (KG)	REF. TO ASSY. DRG.	ITEM NO.	NO.OF ITEMS
CODE 1.15	4.0MM	1:4	94	-N.A.-	-N.A.-	-N.A.-

TITLE
CONTROL VALVE BODY CASTING
F140

CARD CODE

DRAWING NO. 0-305-27-10006 REV. 00

SHT. No 1 NO. OF SHT. 1

REV.	DATE	ALTERED	CHD/APPD	ZONE

THE INFORMATION ON THIS DOCUMENT IS THE PROPERTY OF BHARAT HEAVY ELECTRICALS LIMITED. IT MUST NOT BE USED DIRECTLY OR INDIRECTLY IN ANY WAY DETRIMENTAL TO THE INTEREST OF THE COMPAY

GENERAL DIMENSIONAL LIMITS,FITS & TOLERANCES AS PER HY023026 1

[COMPUTER FILE NAME]

TRACE AND DATE | THIRD ORG. NO.

REVISION NO