FIRST ANGLE PROJECTION (ALL DIMENSIONS ARE IN MM)

DRAWING NUMBER 0-301-34-10003/S

SECTION-B-B

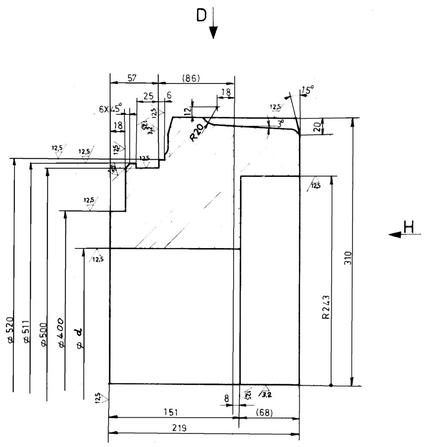

SECTION C-C

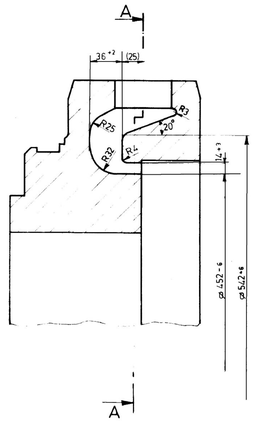

SECTION A-A

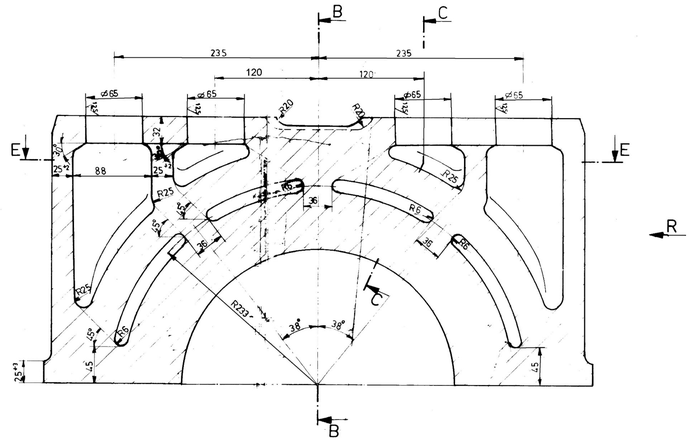

SECTION F-F

(DEVELOPMENT ON P.460)

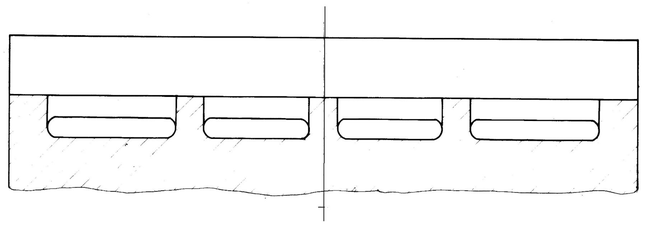

VIEW – D

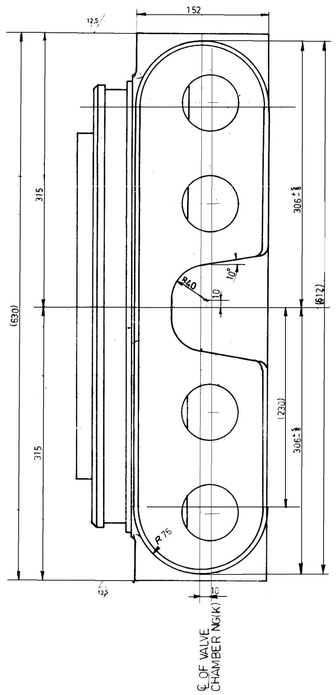

VIEW-R

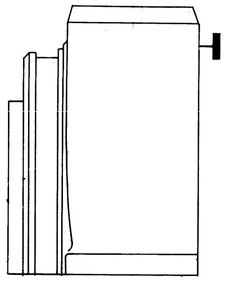

SECTION E-E

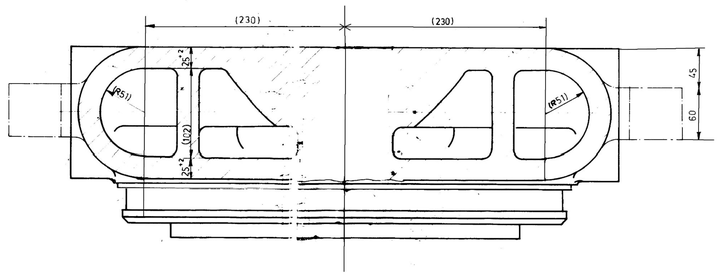

VIEW-H

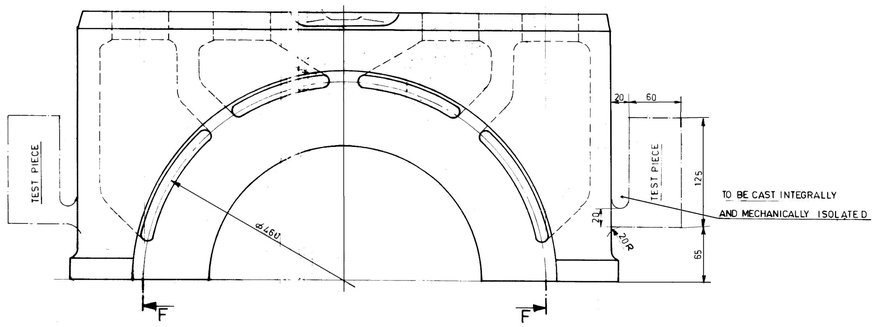

NOTE:

1. CASTING TO BE SUPPLIED IN ROUGH MACHINED & HEAT TREATED CONDITION AS PER PLANT PURCHASE SPECIFICATION
2. THE SUPPLIED CASTING SHOULD NOT CONTAIN ANY CHILLS AND CHAPLETS.
3. WELDED ON CORE PRINTS TO BE MARKED WITH CENTRE PUNCH.
4. UNDIMENSIONED RADII R = 8mm.
5. TEST PIECE TO BE SUPPLIED AS PER PLANT PURCHASE SPECIFICATION
6. MARKING AS PER PLANT PUR. SPEC. TO BE MADE AT PLACES SHOWN THUS. [redacted]
7. SEE ALSO DRAWING 1-30134-10002 FOR LOWER PART.

PLANT PURCHASE SPECIFICATION	wt.	d	MATERIAL	Variant
HY19570	184	270	GS - C25	14
HY19572	165	330	GS-17CrMoV55	13
HY19570	150	350	GS - C25	12
HY19571	160	320	GS-22Mo4	11
HY19573	165	330	GS-17CrMoV511	10
HY19571	165	330	GS-22Mo4	09
HY19570	165	310	GS - C25	08
HY19570	152	375	GS-C25	07
HY19571	186	270	GS 22Mo4	06
—"—	130	245	GS-22Mo4	05
HY19570	130	245	GS-C25	04
—"—	175	305	GS C25	-03
HY19571	175	305	GS 22Mo4	-02
HY19576	175	305	GS 17CrMo55	-01
HY19573	175	305	GS 17CrMoV511	-00

REV	DATE	ALTERED / CHECKED	REV	DATE	ALTERED / CHECKED	REV	DATE	ALTERED / CHECKED
ZONE			ZONE			ZONE		

BHARAT HEAVY ELECTRICALS. LTD.
CENTRAL FOUNDRY FORGE PLANT
RANIPUR HARDWAR

DEPTT. FDY.TECH. | SCALE N.T.S. | WEIGHT

TITLE: STEAM CHAMBER UPPER PART (N32)

	NAME	SIGN	DATE
DRN			
WKD	N K GAURAV		
CHD	R LAKRA		
APPD	T DAVE		

PROJECT AND CUSTOMER NAME: --
TECHNOLOGY NO: 00000
DRAWING NO.: 0-301-34-10003/S
SHEET NO.-1 | NO. OFF SHEETS-1