DRAWING NO 0-55-024-01385

ALL DIMENSIONS ARE IN MILLIMETRES

FOR PRODUCTION
REF. PR:QA:500 FOR PAINTING
REF. PR:QA:500 FOR UNTOL. DWNS.
REF. APPLICABLE CWS FOR MATCODE&SPEC.

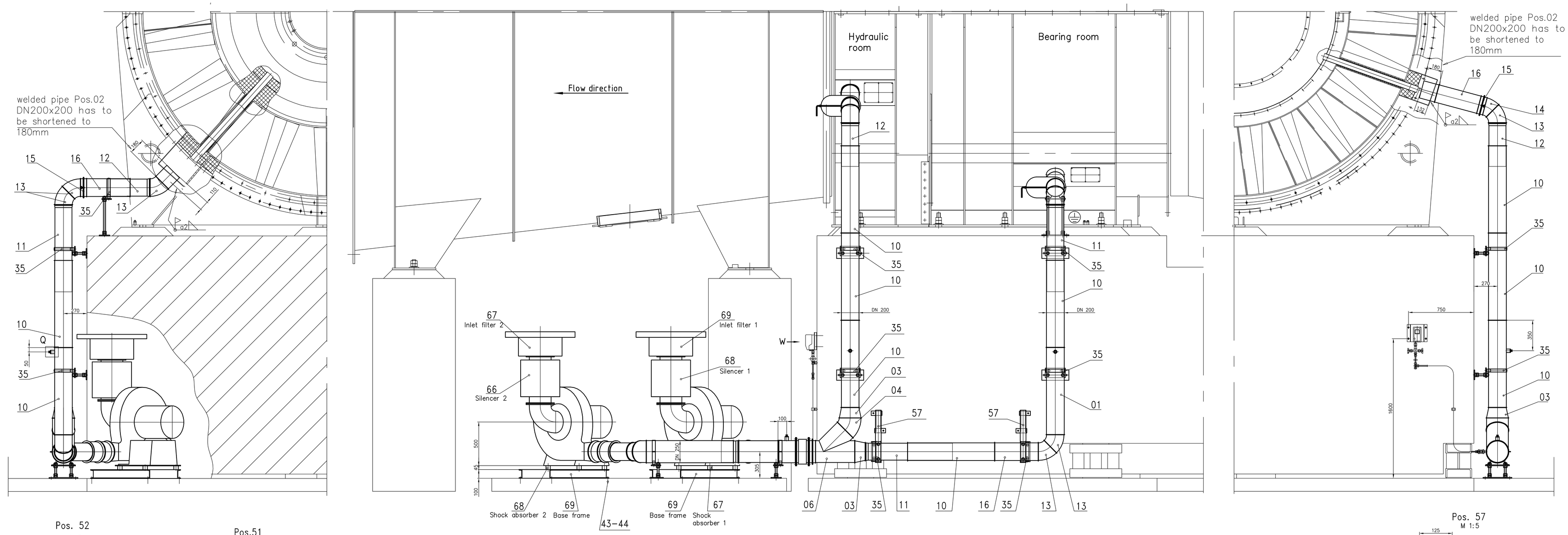

Pos. 52
M 1:5

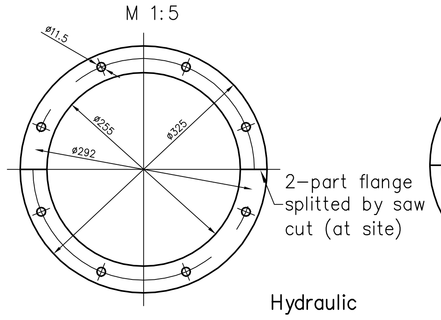

Pos.51
M 1:5

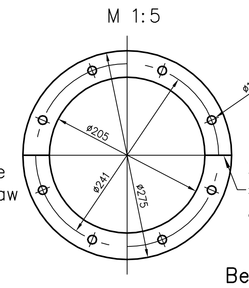

Hydraulic room
M 1:15

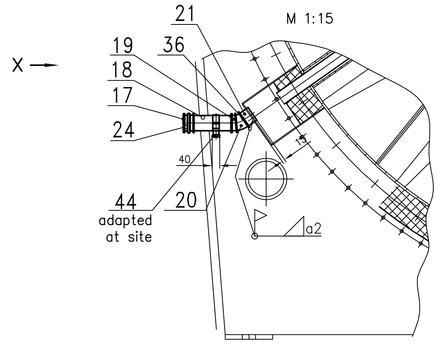

Bearing room
M 1:15

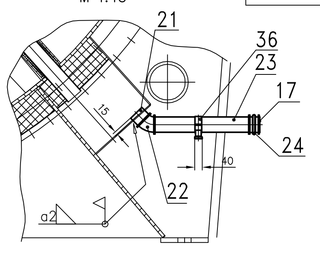

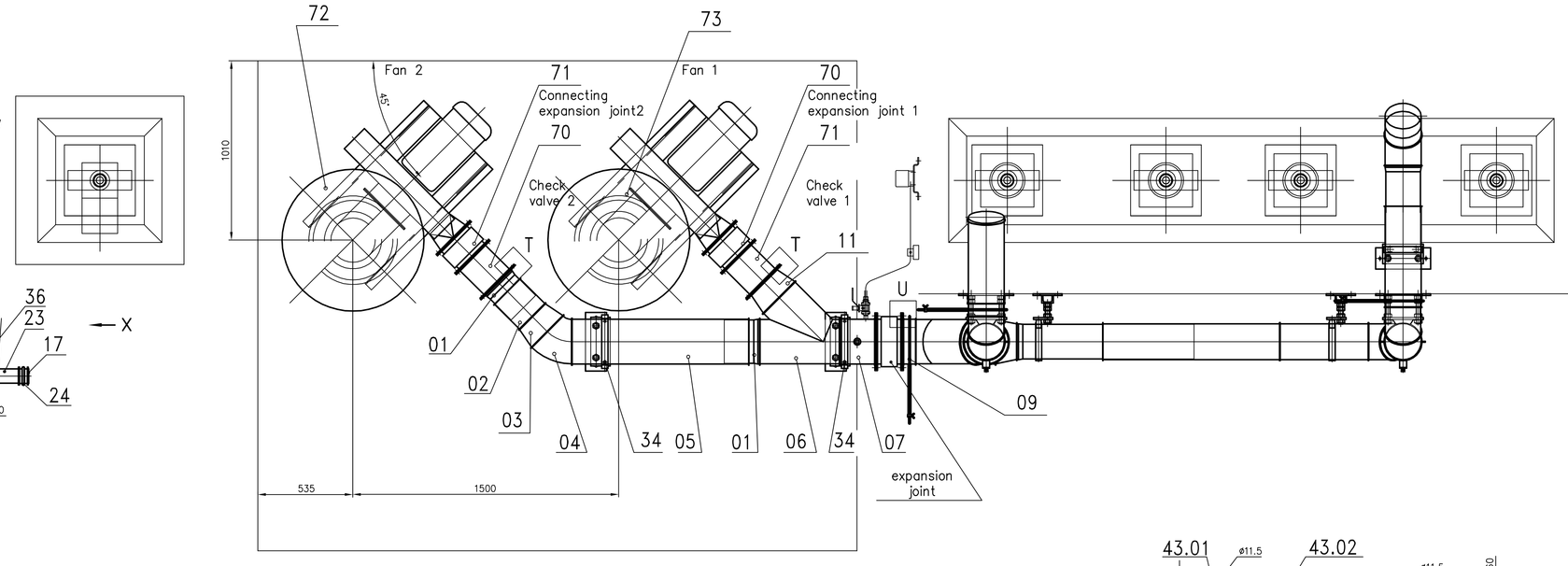

W
M
1:5

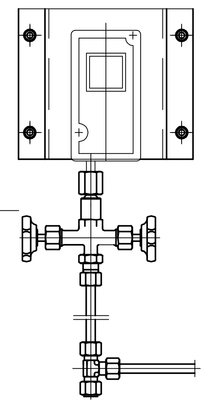

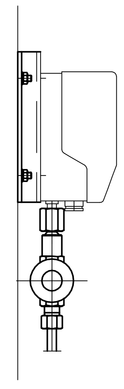

Pos. 57
M 1:5

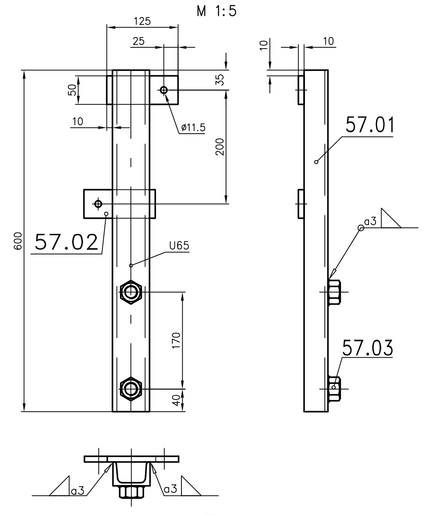

T
M 1:1

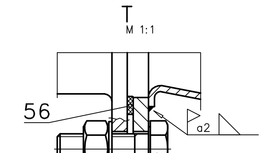

Q
M 1:2
sealed with Loctite 55 (Pos. .265)

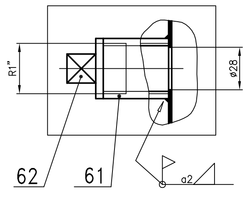

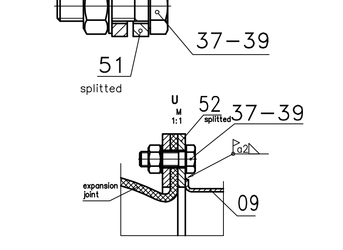

Connection: welded pipe to welded pipe (system Jacob)

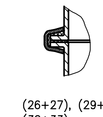

(26+27), (29+30) (32+33)

Connection: welded pipe to push-in pipe (system Jacob)

(26+28), (29+31)

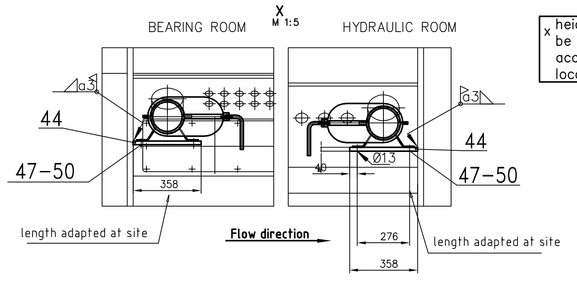

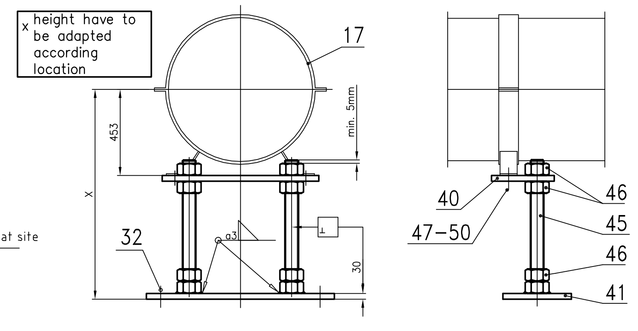

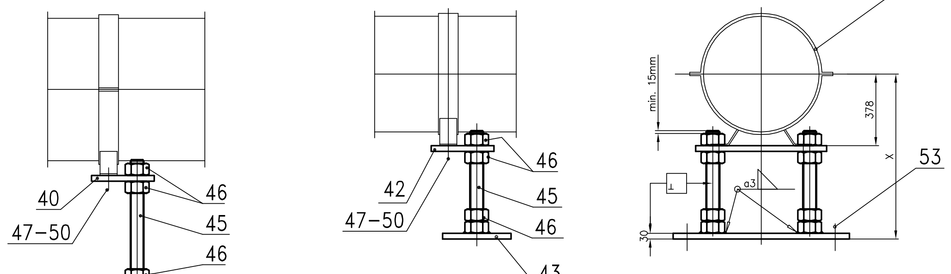

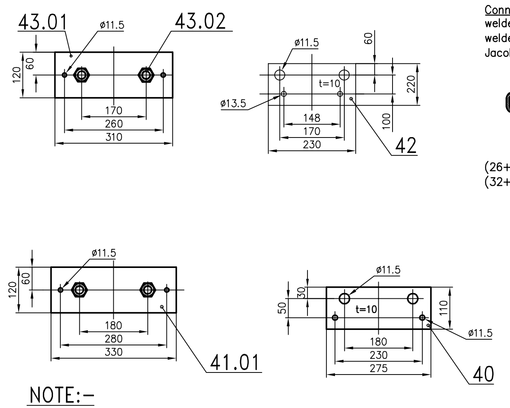

NOTE:-
THIS DRAWING IS TO BE READ ALONG WITH 3-55-024-01996

REV	DATE	ALTERED
ZONE		CHECKED

CAUTION: The information on this document is the property of BHARAT HEAVY ELECTRICALS LTD. It must not be used directly or indirectly in any way detrimental to the interest of the company.

TYPE OF PRODUCT
OR NAME OF
CUSTOMER/PROJECT

BHARAT HEAVY ELECTRICALS LTD.,
UNIT: BOILER AUXILIARIES PLANT.
RANIPET - 632 406.

	NAME	SIGN	DATE	NO.OF VAR.
DRN	PRASANNA		05.05.14	
CHD	PURUSHOTHAMAN		05.05.14	--
APPD	P.SAHA		05.05.14	

DEPT	FANS	GRADE OF UNTOL.DIM	SCALE	WEIGHT (KG).	REF. TO ASSY/OLD DRG.	ITEM NO.	NO. OF ITEMS
CODE	864	PR:QA:500	N.T.S.		0-55-024-01101		

TITLE
COOLING AND SEALING AIR SYSTEM FOR ID FAN

CARD CODE	DRAWING NO.	REV
U 01	0-55-024-01385	

Size A0