FIRST ANGLE PROJECTION (ALL DIMENSIONS ARE IN MM)

DRAWING NUMBER 0-302-05-10003/S

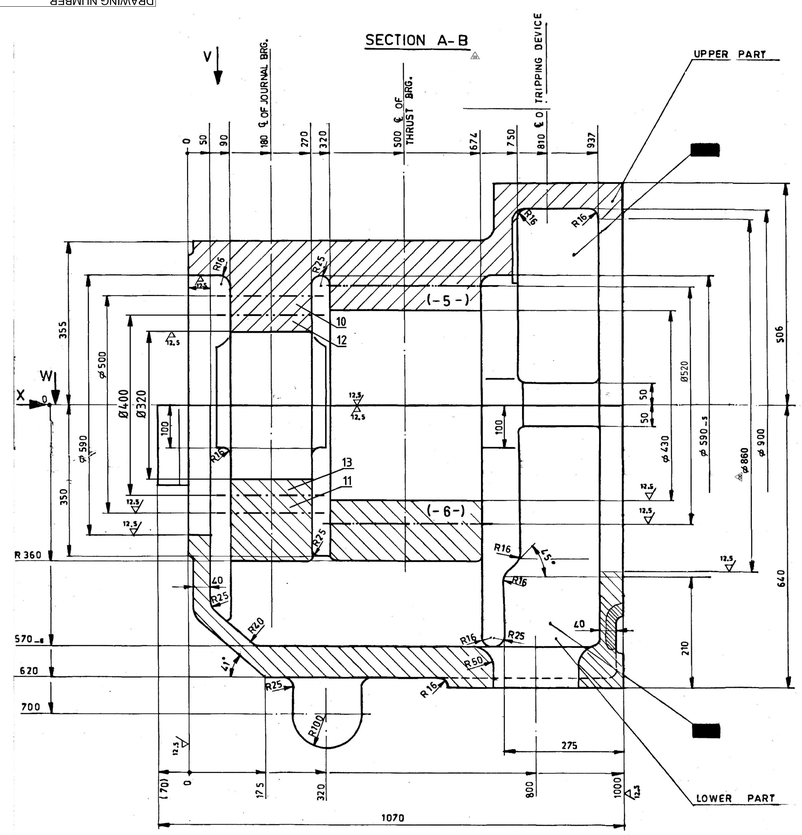

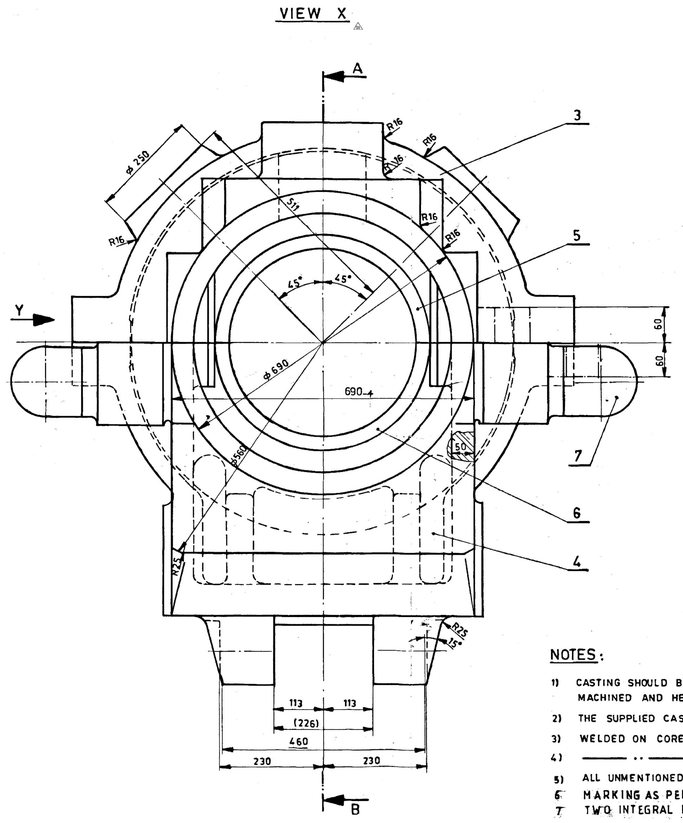

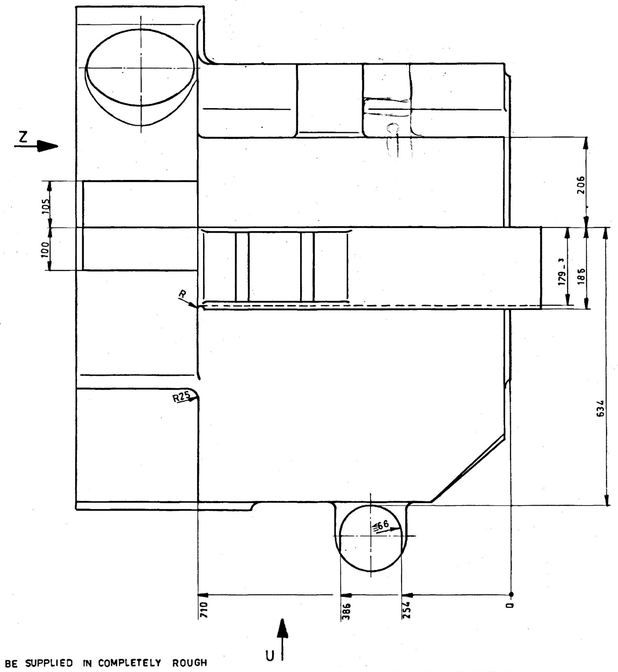

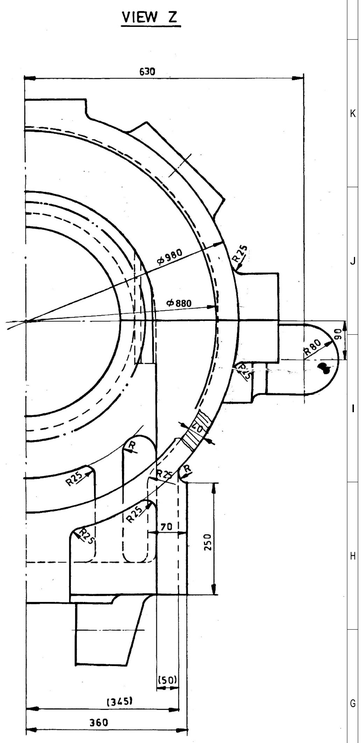

NOTES:

1) CASTING SHOULD BE SUPPLIED IN COMPLETELY ROUGH MACHINED AND HEAT TREATED CONDITION AS PER PLANT PURCHASE SPECIFICATION MENTIONED IN VARIANT TABLE
2) THE SUPPLIED CASTING SHOULD NOT CONTAIN ANY CHAPLETS OR CHILLS.
3) WELDED ON CORE PRINTS ARE TO BE MARKED WITH CENTRE PUNCH.
4) ——— .. ——— .. ——— LOOSE PATTERN PIECES
5) ALL UNMENTIONED RADII R = 4
6 MARKING AS PER PLANT PURCHASE SPECIFICATION TO BE MADE AT PLACES SHOWN THUS ▬
7 TWO INTEGRAL KEEL BLOCKS ARE TO BE PROVIDED ON THIS CASTING AT APPROPRIATE PLACES

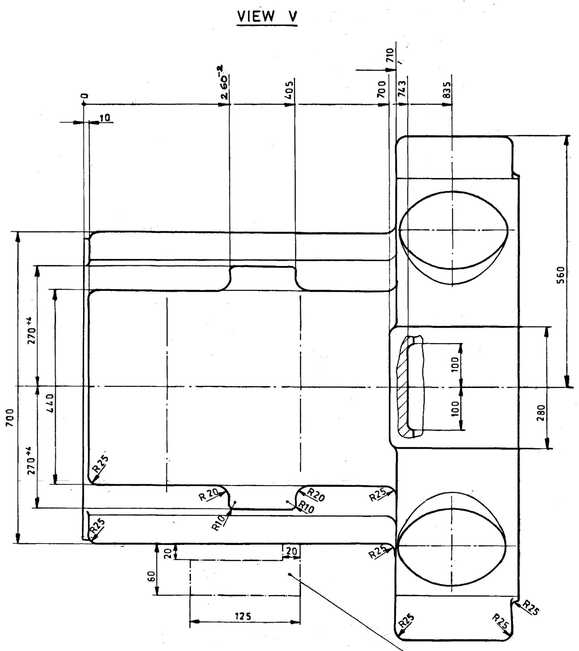

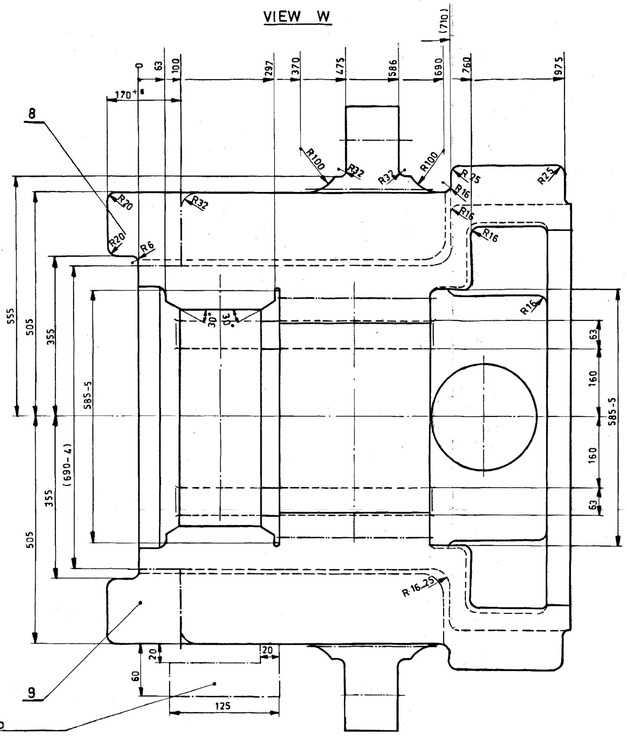

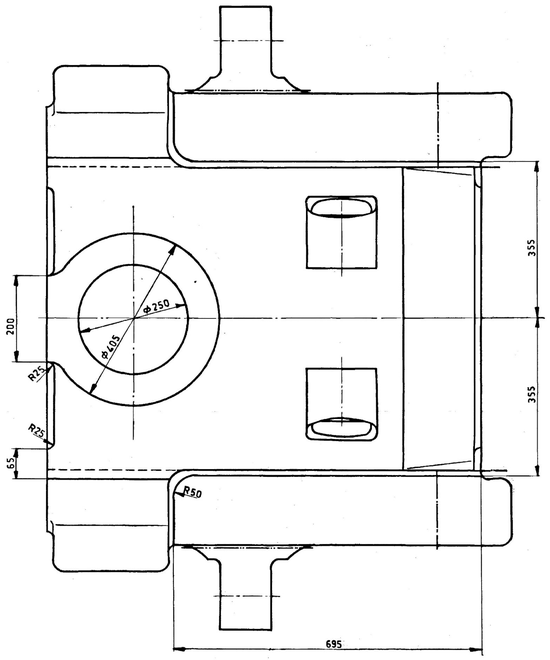

LP	4,11,13	TC9216921757	1472	HY19569	-13
UP	3,10,12	TC9216921749	982		-12
LP	4,6				-11
UP	3,5				-10
LP	4,6,8,9				-09
UP	3,5				-08
LP	4,6,7,8,9				-07
UP	3,5				-06
LP	4	TC9216921695	1390	GS-C25	-05
UP	3	TC9216921680	900	GS-C25	-04
LP	4,8,9				-03
UP	3				-02
LP	4,7,8,9		1400		-01
UP	3		900		-00
POSITION ON	CONSISTS OF	CODE	WT / kg	MATERIAL	VARIANT

REV	DATE	ALTERED / CHECKED	REV	DATE	ALTERED / CHECKED	REV	DATE	ALTERED / CHECKED
ZONE			ZONE			ZONE		

BHARAT HEAVY ELECTRICALS. LTD.
CENTRAL FOUNDRY FORGE PLANT
RANIPUR HARDWAR

DEPTT. FDY. TECH. | SCALE N.T.S | WEIGHT

TITLE: BEARING HOUSING 80

BZ

	NAME	SIGN	DATE
DRN			
WKD	LAVIN		
CHD	R. LAKRA		
APPD	T. DAVE		

PROJECT AND CUSTOMER NAME: -- / --

TECHNOLOGY NO: --

DRAWING NO.: 0-302-05-10003/S

SHEET NO.-I | NO. OFF SHEETS-1