FIRST ANGLE PROJECTION (ALL DIMENSIONS ARE IN MM)

DRAWING NUMBER 0-302-01-10018/S

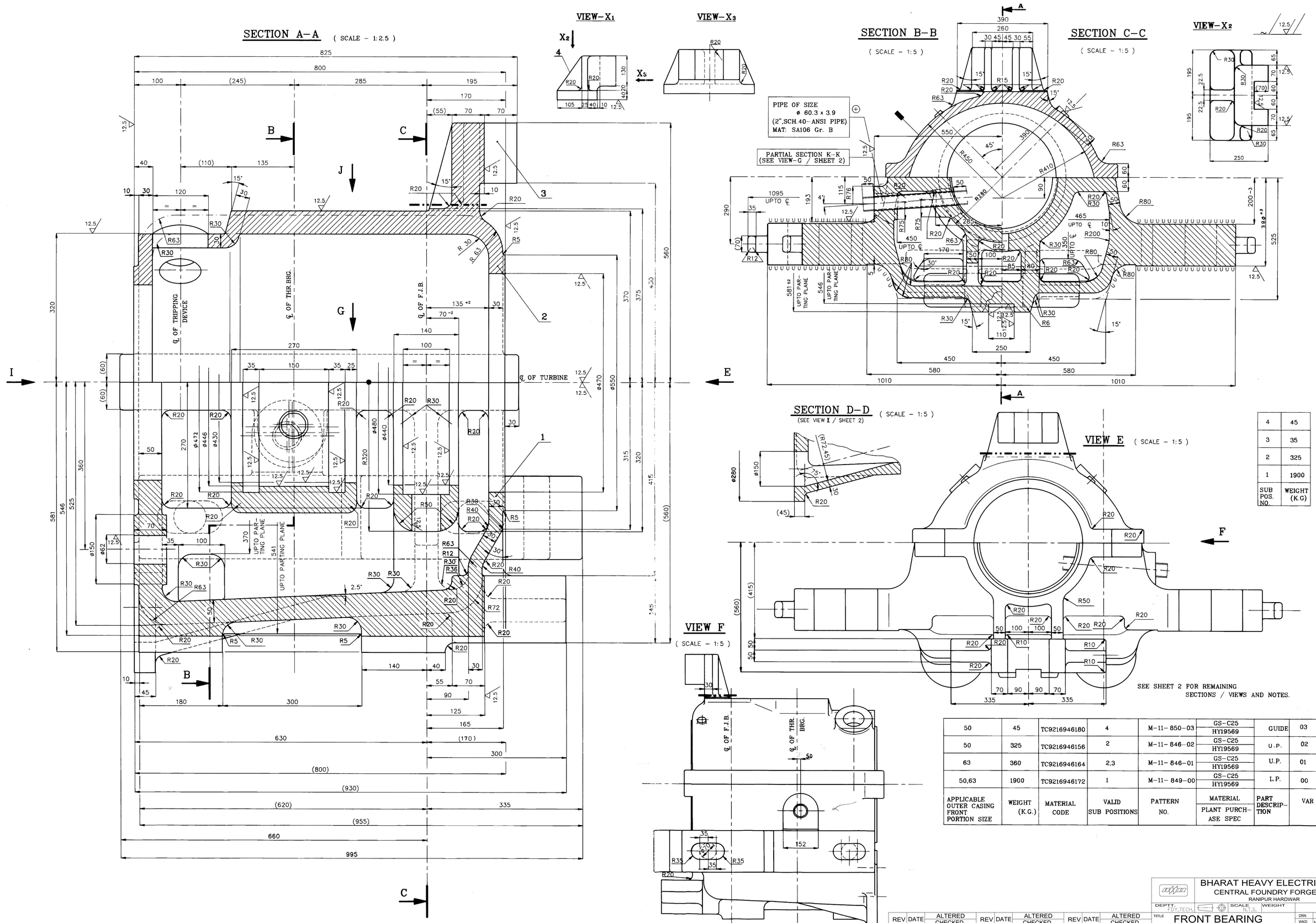


| SUB POS. NO. | WEIGHT (K.G) |
|---|---|
| 4 | 45 |
| 3 | 35 |
| 2 | 325 |
| 1 | 1900 |

| APPLICABLE OUTER CASING FRONT PORTION SIZE | WEIGHT (K.G.) | MATERIAL CODE | VALID SUB POSITIONS | PATTERN NO. | MATERIAL: PLANT PURCHASE SPEC | PART DESCRIPTION | VAR |
|---|---|---|---|---|---|---|---|
| 50 | 45 | TC9216946180 | 4 | M–11–850–03 | GS–C25 / HY19569 | GUIDE | 03 |
| 50 | 325 | TC9216946156 | 2 | M–11–846–02 | GS–C25 / HY19569 | U.P. | 02 |
| 63 | 360 | TC9216946164 | 2,3 | M–11–846–01 | GS–C25 / HY19569 | U.P. | 01 |
| 50,63 | 1900 | TC9216946172 | 1 | M–11–849–00 | GS–C25 / HY19569 | L.P. | 00 |

| REV | DATE | ALTERED / CHECKED | REV | DATE | ALTERED / CHECKED | REV | DATE | ALTERED / CHECKED |
|---|---|---|---|---|---|---|---|---|
| ZONE | | | ZONE | | | ZONE | | |

BHARAT HEAVY ELECTRICALS. LTD.
CENTRAL FOUNDRY FORGE PLANT
RANIPUR HARDWAR

DEPTT. FDY.TECH. | SCALE N.T.S. | WEIGHT | NAME | SIGN | DATE

TITLE: FRONT BEARING PEDESTAL S-2-63

DRN | WKD NAVEEN | CHD R. LAKRA | APPD T. DAVE

PROJECT AND CUSTOMER NAME: -- | TECHNOLOGY NO: -- | DRAWING NO.- 0-302-01-10018/S | SHEET NO.-1 | NO. OFF SHEETS-2

FIRST ANGLE PROJECTION (ALL DIMENSIONS ARE IN MM)

DRAWING NUMBER 0-302-01-10018/S

## VIEW G ( SCALE – 1:2.5 )

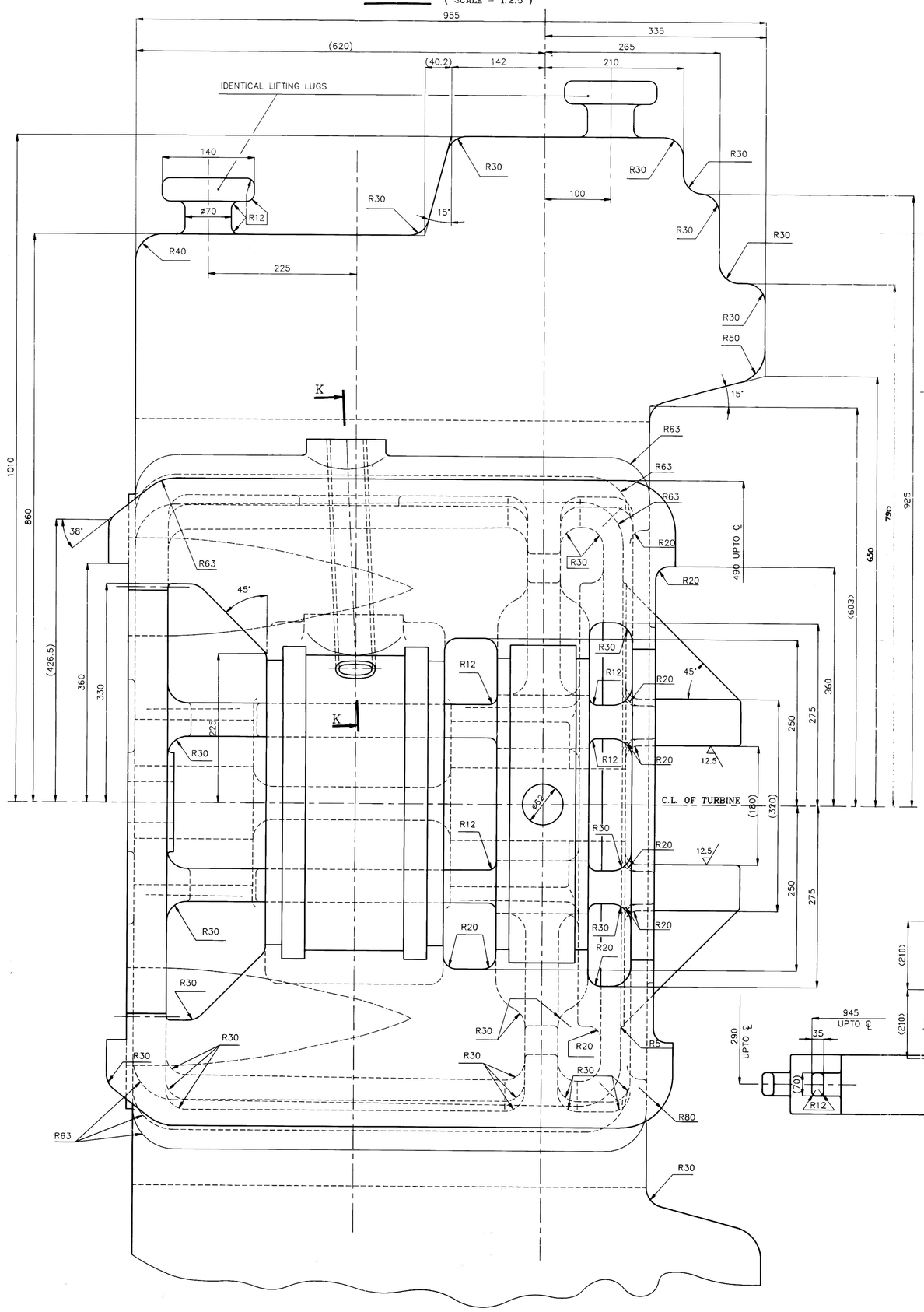


## VIEW H ( SCALE – 1:5 )

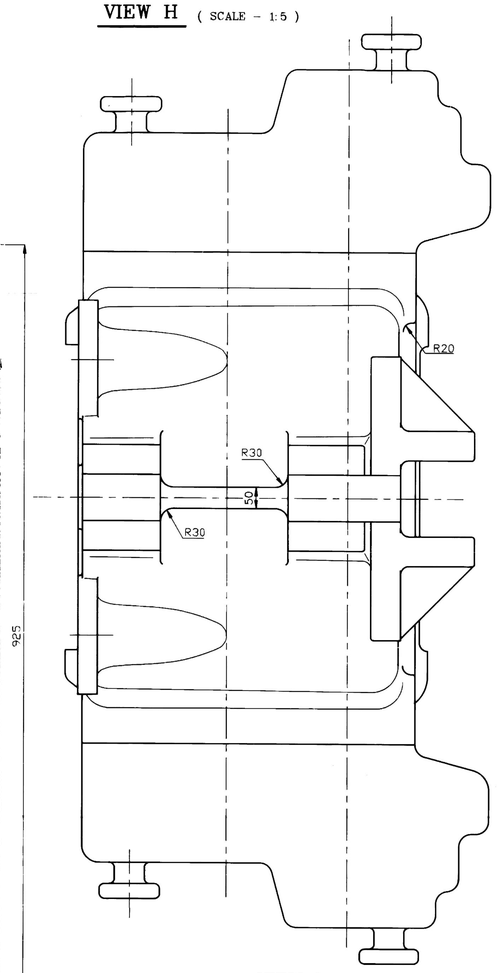


## VJEW J ( SCALE – 1:5 )

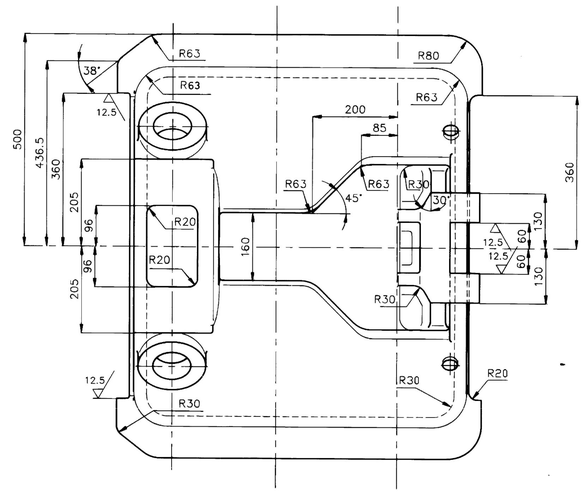


## VIEW I ( SCALE – 1:5 )

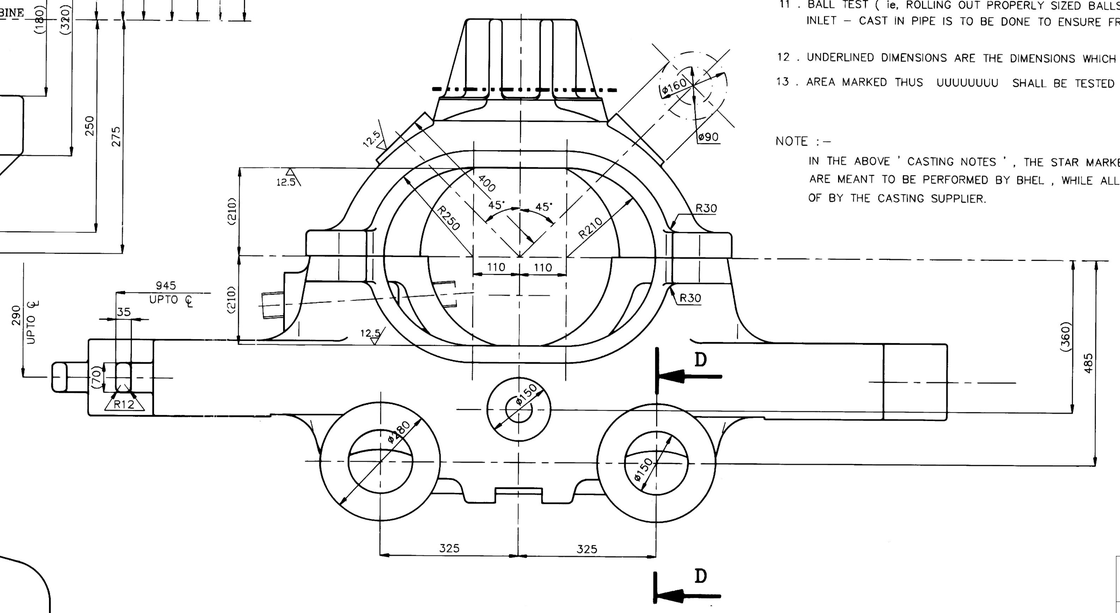


## CASTING NOTES :

1 . CASTING TO BE SUPPLIED AS PER PLANT PURCHASE SPEC. NO. MENTIONED IN THE VARIANT TABLE.

2 . TWO INTEGRAL KEEL BLOCKS ARE TO BE PROVIDED ON THE CASTING AT APPROPRIATE PLACES.

3 . UNMENTIONED RADII R= 6 mm.

4 . WELDED ON COREPRINTS TO BE MARKED WITH CENTRE PUNCH FOR IDENTIFICATION.

5 . MARKINGS AS PER PLANT PURCHASE SPECIFICATION TO BE MADE AT PLACES SHOWN THUS ▬

* 6 . LUBE OIL CAST IN PIPE, MARKED THUS ⊕ ARE TO BE HYDRAULICALLY PRESSURE TESTED AT 5 atg.

7 . BOTH UPPER AND LOWER PARTS TO BE CLEANED FROM INSIDE AS OIL COMES IN CONTACT WITH THE INTERNALS IN OPERATION.

8 . INSIDE AND OUTSIDE MACHINED SURFACES TO BE PROTECTED WITH RUST BAN.

* 9 . OUT SIDE UNMACHINED SURFACES TO BE PAINTED WITH IZ1+ IT + IT.

* 10 . TO DETECT CRACKS KEROSENE TEST SHALL BE CARRIED OUT AS PER SPECIFICATION NO. HY 0851 173.

11 . BALL TEST ( ie, ROLLING OUT PROPERLY SIZED BALLS THROUGH THE MENTIONED AREA ) OF THE LUBE OIL INLET – CAST IN PIPE IS TO BE DONE TO ENSURE FREE PASSAGE OF LUBE OIL THROUGH THE PIPE.

12 . UNDERLINED DIMENSIONS ARE THE DIMENSIONS WHICH ARE NOT DRAWN TO SCALE.

13 . AREA MARKED THUS UUUUUUUU SHALL BE TESTED ULTRASONICALLY AS PER DIN 17245–77 TO QUALITY LEVEL III.

NOTE :–

IN THE ABOVE ' CASTING NOTES ' , THE STAR MARKED NOTES , NAMELY NOTE NO.S 6 , 9 & 10 ARE MEANT TO BE PERFORMED BY BHEL , WHILE ALL THE OTHER NOTES ARE TO BE TAKEN CARE OF BY THE CASTING SUPPLIER.

| REV | DATE | ALTERED / CHECKED | REV | DATE | ALTERED / CHECKED | REV | DATE | ALTERED / CHECKED |
|---|---|---|---|---|---|---|---|---|
| ZONE | | | ZONE | | | ZONE | | |

BHARAT HEAVY ELECTRICALS. LTD.
CENTRAL FOUNDRY FORGE PLANT
RANIPUR HARDWAR

DEPTT. F.DY.TECH. | SCALE N.T.S. | WEIGHT

TITLE: FRONT BEARING PEDESTAL S-2-63

| | NAME | SIGN | DATE |
|---|---|---|---|
| DRN | | | |
| WKD | NAVEEN | | |
| CHD | R. LAKRA | | |
| APPD | T. DAVE | | |

PROJECT AND CUSTOMER NAME: --
TECHNOLOGY NO: --
DRAWING NO.: 0-302-01-10018/S
SHEET NO.- 2 | NO. OFF SHEETS-2